VEHICLE RECOVERY

ELECTRIC WINCH

4500AOR – 4500 lb. Winch w/ Metal Cable & Roller Fairlead

4510AOR – 4500 lb. Winch w/ Synthetic Rope & Aluminum Fairlead

TRAILER/ATV/UTV WINCH

Permanent Magnetic motor
Gear train: 3-Stage Planetary
Gear Ration: 166:1
◎winch：4500LBS(2040kg)

OPERATION MANUAL

READ IT BEFORE YOU USE

Original Instructions

Winch and Wireless Remote Control Installation and Operation Guide.

Every winching situation has the potential for personal injury. In order to minimize that risk, it is important to read this guide carefully. Please familiarize yourself with the operation of you winch before using it and be constantly safety oriented. In this guide we provide important safety information and instructions on how to install your winch.

SAVE THIS MANUAL and other product literature found in this kit for future reference and review frequently for continuing safe operation. Instruct all users of this product to review this manual before operating this product.

TABLE OF CONTENTS:

Symbol Index ..... - 3 -
General Safety Precautions ..... - 4 -
Know Your Winch ..... - 8 -
Mounting ..... - 10 -
Electrical Connections ..... - 11 -
Know Your Wireless Remote ..... - 11 -
Maintenance ..... - 12 -
Trouble Shooting ..... - 13 -
Disposal ..... - 14 -

Symbol Index

Symbol Index for winch

SYMBOL	EXPLANATION	SYMBOL	EXPLANATION
	Read All Product Literature		Always Wear Leather Gloves
	Always Wear Hearing and Eye Protection		Do Not Move People
	Never Use Winch as a Hoist		Always Use Supplied Hook Strap
	Properly Seat Load in Throat of Hook		Never Apply Load to Hook Tip or Latch
	Wind Rope on Bottom of Drum		Never Wind Rope Over Top Drum
	Finger/Fairlead Crushing Hazard		Fairlead Pinch Point
	Hand Piercing/Cutting Hazard		Hot Surface Hazard
	Explosion/Bursting Hazard		Fire and Burn Hazard
	Never Route Electrical Cables Across Sharp Edges		Never Route Electrical Cables through or Near Moving Parts
	Avoid Installing Electrical Cables around pinch and Wear/Abrasion Points		Exposed Wiring Hazard Insulate Exposed Wiring And Terminals
	Clutch Disengaged		Never Hook Back on Rope
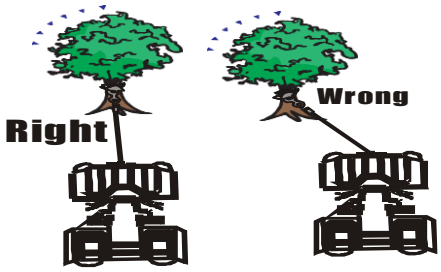	Avoid side pulls	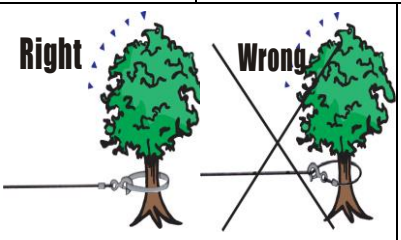	Never hook the wire rope back onto itself

General Safety Precautions

Warnings and Cautions

As you read these instructions, you will see **WARNINGS, CAUTIONS, NOTICES** and **NOTES.** Each message has a specific Purpose. WARNINGS are safety messages that indicate a potentially hazardous situation, which, if not avoided could result in serious injury or death. CAUTIONS are safety messages that indicate a potentially hazardous situation, which, if not avoided, could result in minor or moderate injury. A CAUTION may also be used to alert against unsafe practice. CAUTIONS and WARNINGS identify the hazard, indicate how to avoid the hazard, and advise of the probable consequence of not avoiding the hazard. NOTICES are messages to avoid property damage. NOTES are additional information to help you complete a procedure. **PLEASE WORK SAFELY!**

FCC Regulation

This device complies with Part 15 of the FCC Rule. Operation is subject to the following two conditions:

- This device may not cause harmful interference.
- This device must accept any interference received, including interference that may cause undesired operation.

This equipment has been tested and found to comply with the limits for a Class B digital device, pursuant to part 15 of the FCC Rules. These limits are designed to provide reasonable protection against harmful interference in a residential installation. This equipment generates, uses and can radiate radio frequency energy, and if not installed and used in accordance with the instructions, may cause harmful interference to radio communications. However, there is no guarantee that interference will not occur in a particular installation. If this equipment does cause harmful interference to radio or television reception, which can be determined by turning the equipment off and on, the user is encouraged to try to correct the interference by one or more of the following measures:

- Reorient or relocate the receiving antenna.
- Increase the separation between the equipment and receiver.
- Connect the equipment into an outlet on a circuit different from that to which the receiver is connected.
- Consult the dealer or an experienced radio/TV technician for help.

General Safety Precautions

⚠WARNING

MOVING PARTS ENTANGLEMENT HAZARD
Failure to observe these instructions could lead to serious injury or death.

Winching Safety:

- **Always** Know Your Winch. Take time to fully read the Instructions in Order to understand your winch and its operations.
- **Never** exceed winch or winch rope rated capacity. Double line using a snatch block to reduce winch load.
- **Always** wear heavy leather gloves when handling winch rope.
- **Never** use winch or winch rope for towing. Shock loads can damage, overload and break rope.
- **Never** use a winch to secure a load.
- **Never** operate this winch when under the influence of drugs, alcohol or medication
- **Never** operate this winch if you are under 16 years of age.

Installation Safety:

- **Always** choose a mounting location that is sufficiently strong to withstand the maximum pulling capacity of your winch.
- **Always** use class8.8 metric (grade 5) or better hardware.
- **Never** weld mounting bolts.
- **Always** use factory approved mounting hardware, components, and accessories.
- **Never** use bolts that are too long.
- **Always** confirm required bolt length to ensure proper thread engagement.
- **Always** complete the winch installation and hook attachment before installing the wiring.
- **Always** keep hands clear of winch rope, hook loop, hook and fairlead opening during installation, operation, and when spooling in or out.
- **Always** position fairlead with warning readily visible on top.
- **Always** prestretch rope and respool under load before use. Tightly wound rope reduces chances of “binding”, which can damage the rope.

⚠WARNING

MOVING PARTS ENTANGLEMENT HAZARD
Failure to observe these instructions could lead to serious injury or death.

General Safety:

- **Always** inspect winch rope, hook, and slings before operating winch. Frayed, kinked or damaged winch rope must be replaced immediately. Damaged components must be replaced before operation. Protect parts from damage.
- **Always** remove any element or obstacle that may interfere with safe operation of the winch.
- **Always** be certain the anchor you select will withstand the load and the strap or chain will not slip.
- **Always** use supplied hook strap whenever spooling winch rope in or out, during installation and during operation.
- **Always** require operators and bystanders to be aware of vehicle and or load.
- **Always** be aware of stability of vehicle and load during winching, keep others away. Alert all bystanders of an unstable condition.
- **Always** unspool as much winch rope as possible when rigging. Double line or pick distant anchor point.
- **Always** take time to use appropriate rigging techniques for a winch pull.
- **Never** touch winch rope or hook while someone else is at the control switch or during winching operation.
- **Never** engage or disengage clutch if winch is under load, winch rope is in tension or drum is moving.
- **Never** touch winch rope or hook while under tension or under load.
- **Always** stand clear of winch rope and load and keep others away while winching.
- **Never** use vehicle to pull load on winch rope. Combined load or shock load can damage, over load and break rope.
- **Never** wrap winch rope back onto itself. Use a choker chain or tree trunk protector on the anchor.
- **Never** use remote when vehicle is not in line of sight of operator.
- **Never** pair more than one winch and one remote together at the same time.

General Safety Precautions

⚠WARNING

MOVING PARTS ENTANGLEMENT HAZARD

Failure to observe these instructions could lead to serious injury or death.

- **Always** ensure hook latch is closed and not supporting load.
- **Never** apply load to hook tip or latch. Apply load only to the center of hook.
- **Never** use a hook whose throat opening has increased, or whose tip is bent or twisted.
- **Always** use a hook with a latch.
- **Always** ensure the operator and bystanders are aware of the stability of the vehicle and/or load.
- **Never** hook back on rope.

⚠WARNING

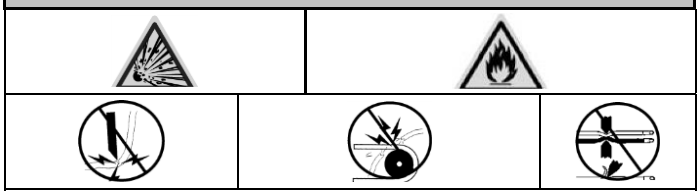

CHEMICAL AND FIRE HAZARD

Failure to observe these instructions could lead to serious injury or death.

- **Always** remove jewelry and wear eye protection.
- **Never** route electrical cables across sharp edges.
- **Never** route electrical cables near parts that get hot.
- **Never** route electrical cables through or near moving parts.
- **Always** place the supplied terminal boots on wires and terminals as directed by the installation instructions.
- **Never** lean over battery while making connections.
- **Never** route electrical cables over battery terminals.
- **Never** short batter terminals with metal objects.
- **Always** consult operator's manual for proper wiring details.
- **Always** insulate and protect all exposed wiring and electrical terminals.
- **Always** connect red (+) power cable ONLY to the positive (+) terminal of the battery.
- **Always** connect black ground (-) power cable ONLY to the negative (-) terminal of the battery.
- **Never** connect red (+) power cable to the negative (-) terminal of the battery.

⚠WARNING

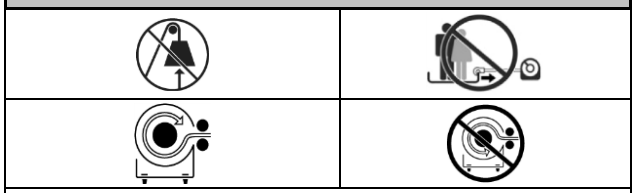

FALLING OR CRUSHING HAZARD

Failure to observe these instructions could lead to serious injury or death.

- **Always** stand clear, keep hands clear, keep others away.
- **Never** operate winch with less than 5wraps of wire rope/10wraps of synthetic rope around the drum. Rope could come loose from the drum, as the rope attachment to the drum is not designed to hold a load.
- **Never** use winch as a hoist or to suspend a load.
- **Always** be certain anchor will withstand load, use appropriate rigging and take time to rig correctly.
- **Never** use winch to lift or move persons.
- **Never** use excessive effort to free spool winch rope.
- **Always** use proper posture/lifting technique or get lifting assistance while handling and installing product.
- **Always** wind the winch rope on bottom (mount side) of drum.
- **Never** wind rope over top of drum.
- **Always** spool the winch rope onto the drum in the direction specified by the drum rotation labels on the winch and/or in the documentation. This is required for the automatic brake (if so equipped) to function properly.

⚠WARNING

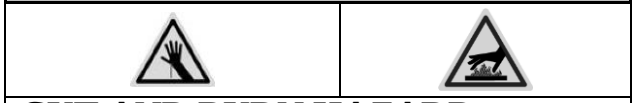

CUT AND BURN HAZARD

Failure to observe these instructions could lead to serious injury or death.

To avoid injury to hands and fingers:

- **Always** wear heavy leather gloves when handling winch rope.
- **Always** be aware of possible hot surfaces at winch motor, drum or rope during or after winch use.

General Safety Precautions

⚠ CAUTION

MOVING PARTS ENTANGLEMENT HAZARD

Failure to observe these instructions could lead to serious injury or death.

To avoid injury to hands and fingers:

- **Never** leave winch remote control where it can be activated during free spooling, ringing, or when the winch is not being used.
- **Never** leave the wireless winch remote control turned on when installing, free spooling, rigging or servicing winch, or when the winch is not being used.

⚠ CAUTION

CUT AND BURN HAZARD

Failure to observe these instructions could lead to minor or moderate injury.

- **Never** let winch rope slip through your hands.

NOTICE

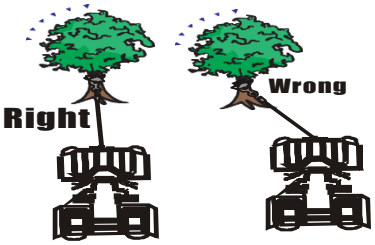

AVOID WINCH AND EQUIPMENT DAMAGE

- **Always** avoid side pulls which can pile up winch rope at one end of the drum. This can damage winch rope or winch.
- **Always** ensure the clutch is fully engaged or disengaged.
- **Always** use care to not damage the vehicle frame when anchoring to a vehicle during a winching operation.
- **Never** submerge winch in water, if not IP68 rated.
- **Always** store the remote control in a protected, clean dry area.

NOTICE

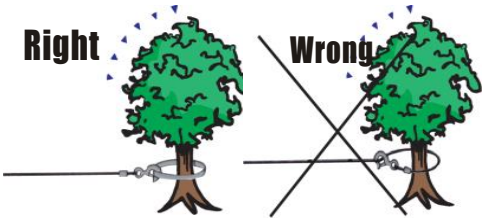

- Never hook the wire rope back onto itself because you could damage the wire rope .Use a strap.
- Avoid continuous pulls from extreme angles as this will cause the wire rope to pile up on one end of the drum. This can jam the can jam the wire rope of the winch.

This manual provides instructions on how to install and operate your winch and operating your Wireless Remote Control.

Safety

When installing your winch system, read and follow all mounting and safety instructions.

Always use caution when working with electricity and remember to verify that no exposed electrical connections exist before energizing your winch circuit.

For specifications and performance data, refer to the specification sheet supplied in this manual.

Know Your Winch

4500lb Specifications
Rated Line Pull: 4500lbs (2041kg)
Motor: 12V DC 3.5HP Permanent Magnet Motor, Sealed
Controls: Remote Control (Handlebar) or Wireless Remote Control (Optional)
Gear train: 3-Stage Planetary
Gear Ration: 166:1
Clutch (Freespool): Sliding Pin
Drum diameter/length:2.0 " /4.5” (50/115)
Rope: Galvanized Steel Wire 1/4 " x49.2’ (6.35mm x 15m)
Recommended Battery: 12 Amp/hr minimum
Fairlead: Roller
Duty Cycle: Intermittent
Mounting Bolt Pattern: 3.0 " x6.5” (76.2mm x 164mm)
Winch Dimensions: 13.8 " Lx4.5 " Dx4.7” H (367mm x 128mm x 122mm)
Shipping Weight (cable winch): 31.5lbs (14.5kgs)
Shipping Weight (rope winch): 27.8lbs (12.5kgs)

LINE PULL AND ROPE CAPACITY LAYER							
Layer of cable		1	2	3	4		
Rated line pull	Lbs	4500	3840	3309	2907		
	Kgs	2041	1742	1501	1319		
Cable of layer	Ft	12.1	21.9	42.0	49.2		
	M	3.7	6.7	12.8	15		

LINE SPEED & AMP DRAW-FIRST LAYER							
Line pull	Lbs	NO	1000	2000	3000	4500	
	Kgs	LOAD	454	907	1361	2041	
Line Speed	Fpm	14.4	9.8	8.2	6.9	4.6	
	Mpm	4.4	3.0	2.5	2.1	1.4	
Amp	A	35	92	120	160	220	

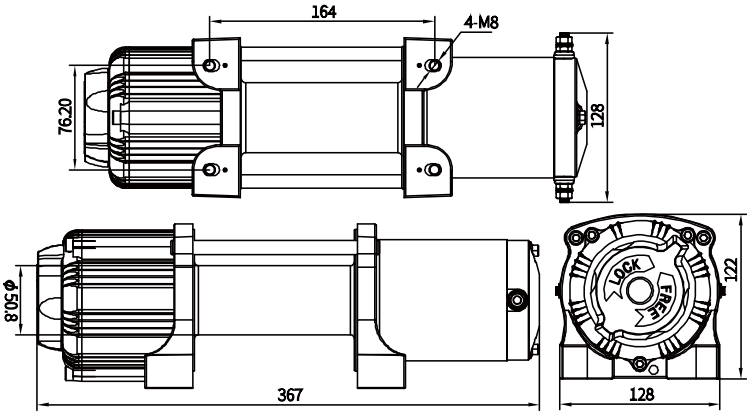

Know Your Winch

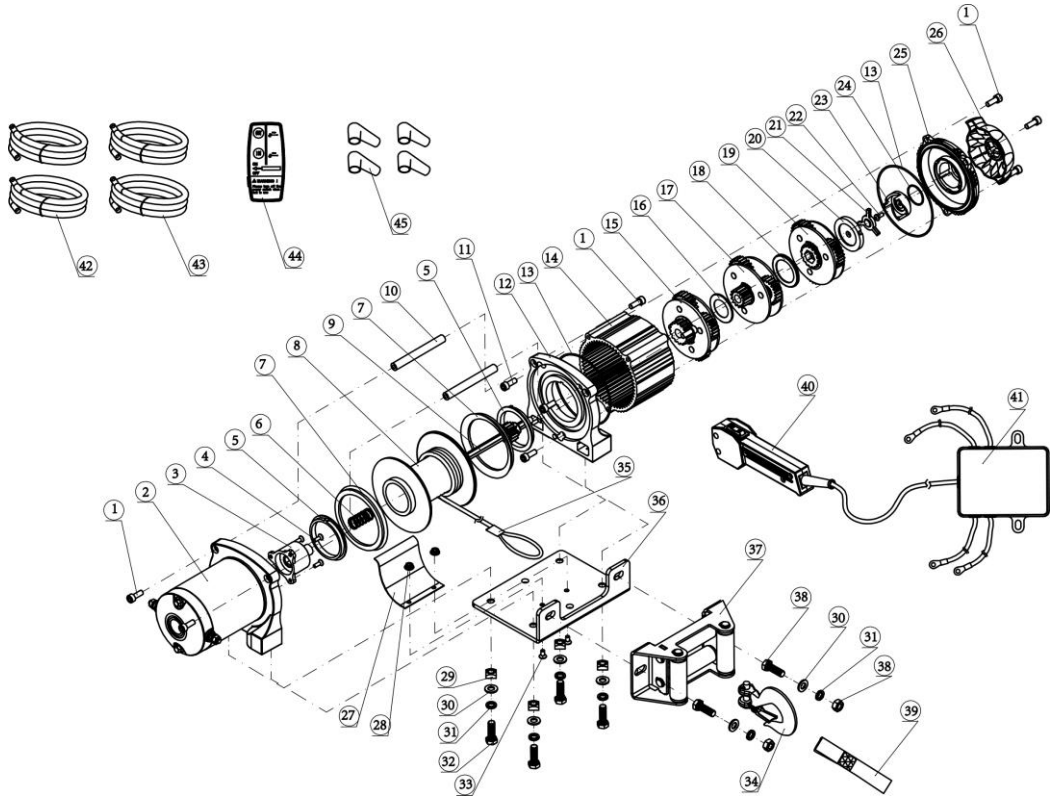

No.	Name	Qty	No	Name	Qty
1	M6*18 inside hexagon screw	7	24	φ24*1.5 O ring	1
2	motor assembly	1	25	gear box cover	1
3	brake assembly	1	26	clutch handle	1
4	M4*10 cross countersunk head screw	2	27	spring plate	1
5	sliding bearing	2	28	M5*10 flange nut	2
6	clutch spring washer	1	29	M8 square nut	4
7	sealing	2	30	φ8 flat washer	6
8	drum	1	31	φ8 spring washer	6
9	transmission shaft assembly	1	32	M8*30hexagon screw	4
10	tie bar	2	33	M5*10 countersunk head screws	2
11	M6*18inside hexagon screw	3	34	hook	1
12	gearbox bracket	1	35	cable assembly	1
13	φ98*1.9 O ring	2	36	mounting plate	1
14	gear box tube with teeth	1	37	roller fairlead	1
15	3rd stage planetary gear	1	38	M8 hexagon nut	2
16	plastic spacer 1	1	39	hook belt	1
17	2nd stage planetary gear	1	40	wired remote handle	1
18	plastic spacer2	1	41	control box assembly	1
19	1st stage planetary gear	1	42	battery wire cord	2
20	plastic washer	1	43	motor wire cord	2
21	triangle slider	1	44	wireless remote handle	1
22	M4*10 self-tapping screw	1	45	wire cord sheath	4
23	clutch disc	1			

Mounting

CAUTION To prevent accidental activation of the winch and serious injury, complete the winch installation and attach the hook before installing the wiring.

WARNING Always choose a mounting location that is sufficiently strong enough to withstand the maximum pulling capacity of your winch.

WARNING Always spool the winch rope onto the drum in the direction specified by the drum rotation labels on the winch and/or in the documentation. This is required for the automatic brake (if so equipped) to function properly.

WARNING Always wind the winch rope on the bottom (mount side) of the drum.

This winch should always be mounted in a horizontal orientation with the rope winding on and off the drum on the mount side (bottom) of the drum.

Correct rotation is required for the automatic brake to function properly. Horizontal mounting helps prevent the rope from piling up on one end of the drum which can damage the winch.

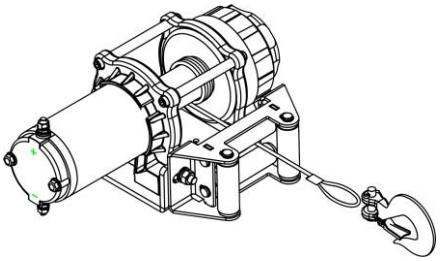

Freespool Operation

Pull and turn the clutch knob to the "Freespool" position. Activate the winch in Cable Out to check the drum rotation direction. If the drum rotates in the wrong direction, recheck your wiring. If there is a load on the rope, the clutch knob may not pull out easily. DO NOT FORCE THE CLUTCH KNOB. Release tension on the clutch by jogging out some of the rope. Check that there are at least five turns of wire rope/ ten turns of synthetic rope left on the drum. Re-engaged the drum by returning the clutch knob to the "Engaged" position. Different winches with different clutches as the followed figures, you shall make sure which one fit to your winch.

ATV winch	clutch	Freespool operation
	Rotate	

CAUTION!

- Clutch must be fully engaged before winching.
- Never engage clutch knob while drum is turning.
- If the winch motor stalls, do not continue to apply power.

Electrical Connections

Refer to the figure for wiring diagram.

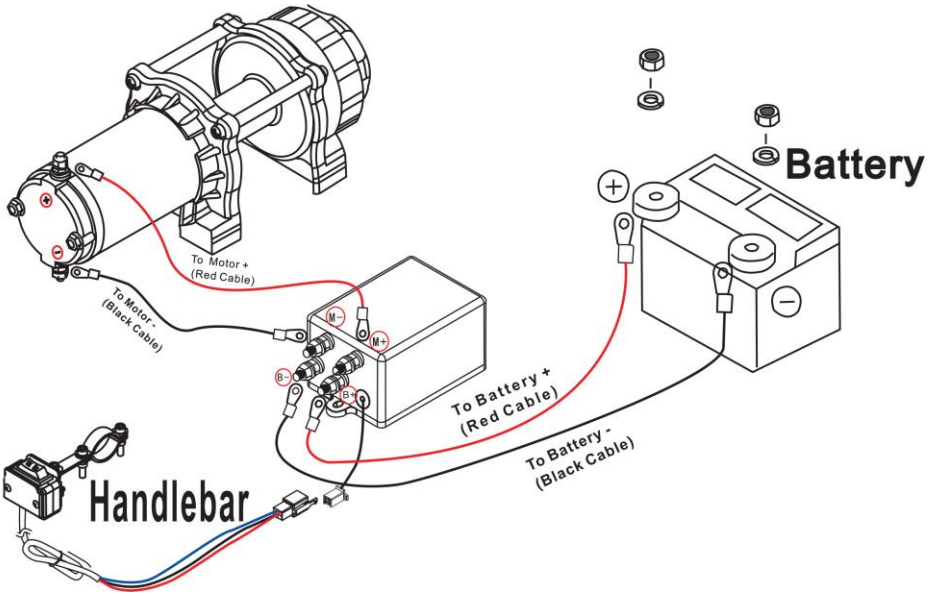

Know Your Wireless Remote

Before you begin, you should familiarize yourself with our Wireless Remote Control and each of its functions.

For wireless remote control with blue shell:

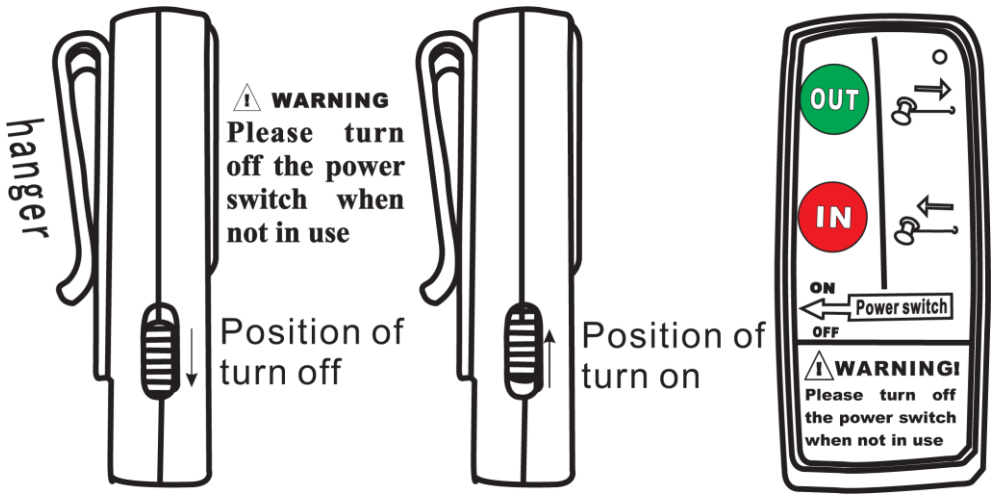

Note: Battery is in back and keep away from water.

Maintenance

Check	Before first operation	After each use	Every 90 days
Take time to fully read the Instructions. in order to understand your winch and its operations	√		
Check fasteners and make sure they are tight and to proper torque. Replace damaged fasteners.	√		√
Verify wiring to all components is correct and be certain that all connections are tight.	√		√
Verify there is no exposed/bare wiring – terminals or cable insulation damage (chafing/cutting). Cover any exposures with terminal boots. Repair or replace damaged electrical cable.	√		√
Inspect rope for damage. Replace rope immediately if damaged.	√	√	√
Keep winch, rope and switch control free from contaminants. Use a clean rag or towel to remove any dirt and debris.		√	
Check and place/replace the battery of wireless remote control	√		√
Turn off the power after use	√		√

Trouble Shooting

Trouble Shooting/Error Conditions

When the winch fails to operate after several attempts, or if there is any fault operation while winching. Check the following:

Symptom	Possible cause	Remedy
Winch will not operate	Cut Circuit or loosing	Check battery cable
	The remote battery is critically low	Replace or charge battery
	Wireless signal strength is low	Decrease distance between remote control and winch.
	Damaged over load protector	Replace over load protector
	Loose connection of wirings	Checking all wirings
	Damaged or stuck solenoid	Replace solenoid
	Defective remote control	Check winch operation with an auxiliary switch
	Damaged motor or worn carbon brush	Replace motor or carbon brush
	Winch control pack is Under water. Wireless signal will not transmit under water	Winch control pack needs to be above water to receive wireless signal.
Motor runs in one direction	Broken wiring or bad connection	Reconnect or replace wiring
	Damaged or stuck solenoid	Replace solenoid
	Switch inoperative	Replace switch
	Dropt or lost wiring	Replace wiring and tighten
Drum will not free spool	Freespool not dis-engaged	Disengaged freespool
	Damaged brake or freespool assy	Replace brake or freespool assy
	Damaged gear box	Replace gear box
No brake	Damaged on inoperative pressed spring	Replace pressed spring
	Disengaged freespool	Engaged freespool
	Damaged inner gear plate	Replace inner gear plate
	Damaged inner gear	Replace inner gear
Winch runs opposite direction	Motor leads crossed	Reverse electric connections to motor
	Solenoid control crossed	Reverse black and red wires on solenoid
	Remote control or trigger switch crossed	Reverse electric connections
Motor runs extremely hot	Long period of operation	Stop operation and make it cool
	Over load	Reduce load
	Damaged or inoperative of brake	Replace or repair the brake

Disposal

Batteries should not be disposed of in general household waste. Observe the local waste disposal regulations, details of which can be obtained from your local authority.

All electrical and electronic equipment must be disposed of separately from general household waste using the sites designated by local authorities.

If a product displays this symbol of a crossed-out wheelie bin, the product is subject to European Directive 2012/19/EC.

The appropriate disposal and separate collection of used equipment serve to prevent potential harm to the environment and health. They are a prerequisite for the re-use and recycling of used electrical and electronic equipment.

For further information on disposing of your used equipment, please contact your local authority or your refuse collection service.

199R11640

Date: 8-22-18