Holley Accessory Drive Kits

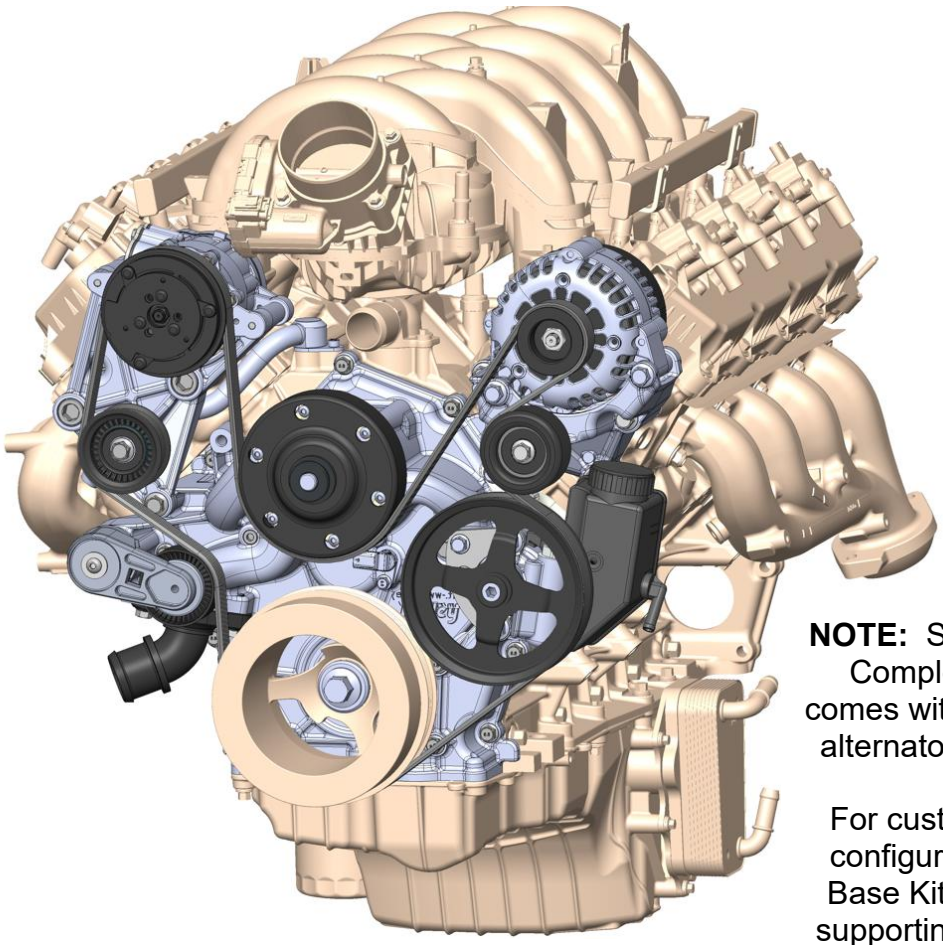

NOTE: Shown is 20-310 Complete Kit which comes with A/C, P/S, and alternator P/N 197-300.

For custom accessory configurations use the Base Kit and choice of supporting components.

Covered products:

Part Numbers	Type	Description
20-310 & 20-310BK	Complete Kit	Includes alternator, A/C, P/S, water pump, timing cover, and other accessories and adapters
20-300 & 20-300BK	Base Kit	Allows adding components for any custom application not needing all accessories and/or different alternator choices
This instruction sheet also covers individual components that may or may not be included in the above kits.		

Table of Contents:

Parts List: 2
Dimensions: 5
Introduction: 5
MODULAR ACCESSORY OPTIONS: 6
Assembly Instructions 6
Oil Pan and Timing Cover Removal: 6
Heater Options and Timing Cover Assembly: 7
Water Pump and Gasket Installation: 9
Timing Cover Installation: 10
Crank Seal Installation: 10
Damper Pulley Installation: 11
Water Inlet Options and Installation: 12
Alternator Options and Installation: 12
OPTIONAL ACCESSORY – P/S Pump/Reservoir Installation: 13
OPTIONAL ACCESSORY – A/C Compressor Installation: 14
Belt Tensioner Options and Installation: 16
Belt Installation: 17
OPTIONAL ACCESSORIES – Pulley and Tensioner Covers: 17
Oil Pan Reinstallation: 18

Parts List:

PICTURE	INC. WITH COMPLETE KIT	INC. WITH BASE KIT	DESCRIPTION	MANUFACTURER & P/N
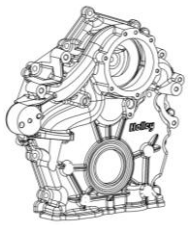	1	1	Timing Cover/Water Pump Manifold	Holley 97-410 (natural) 97-418 (black)
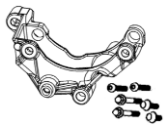	1	1	Alternator Bracket With Hardware	Holley 97-402 (natural) 97-420 (black)

PICTURE	INC. WITH COMPLETE KIT	INC. WITH BASE KIT	DESCRIPTION	MANUFACTURER & P/N
	1		A/C Bracket With Hardware	Holley 97-403 (natural) 97-421 (black)
	1	1	Water Pump Drive Assembly	Holley 97-200
	1	1	Gasket, Water Pump Assembly	GM 12619770
	1		Belt, 6 Rib Serpentine	BANDO 6PK2010
	1		Heater Hose Adapter Kit	Holley 300-901
	1		Alternator	Holley 197-300 (natural) / 197-303 (black)
	1		Harness Pigtail, Alternator	Holley 197-400
	1		SD7 A/C Compressor	Holley P/N 199-102 (natural) / 199-104 (black)
	1		Adapter Manifold for A/C Compressor	Holley 199-202
	1		P/S Pump with Reservoir	Holley 198-104
	1		P/S Pressure Hardline to -6 AN & Hardware	Holley 198-240
	1		P/S Pulley	Holley 97-152
	1		Ribbed Idler Pulley	Holley 97-344

PICTURE	INC. WITH COMPLETE KIT	INC. WITH BASE KIT	DESCRIPTION	MANUFACTURER & P/N
	1	1	Smooth Idler Pulley	Holley 97-150
	1		Tensioner Assembly with Smooth Pulley	Holley 97-179 (Used with A/C)
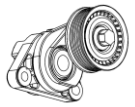			Tensioner Assembly with Grooved Pulley	Holley 97-151 (Used Without A/C)
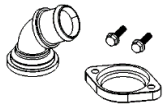	1	1	Water Neck 45 Deg.	Holley 97-343
	1	1	Seal Installation Tool	Holley 97-400
	1	1	Seal, Cover to Damper	Ford GK2Z 6700 A
	1	1	Damper Bolt	Ford LC3Z 6A340 A
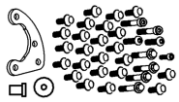	1	1	Hardware kit for Timing Cover	Holley 97-411

*INCLUDED ONLY WITH BLACK (BK) COMPLETE KITS				
	1*		Alternator Pulley Cover & O-ring	Holley 97-187 (black)
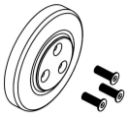	1*		A/C Compressor Pulley Cover & Hardware	Holley 97-185 (black)
	1*		Tensioner Cover & Hardware	Holley 97-158 (black)

Dimensions:

Shown with factory oil pan, P/N 300-900 low-profile intake, and P/N 534-265 fuel rails. Dimensions are with P/N 197-300 small case alternator. Large case alternators will be slightly taller.

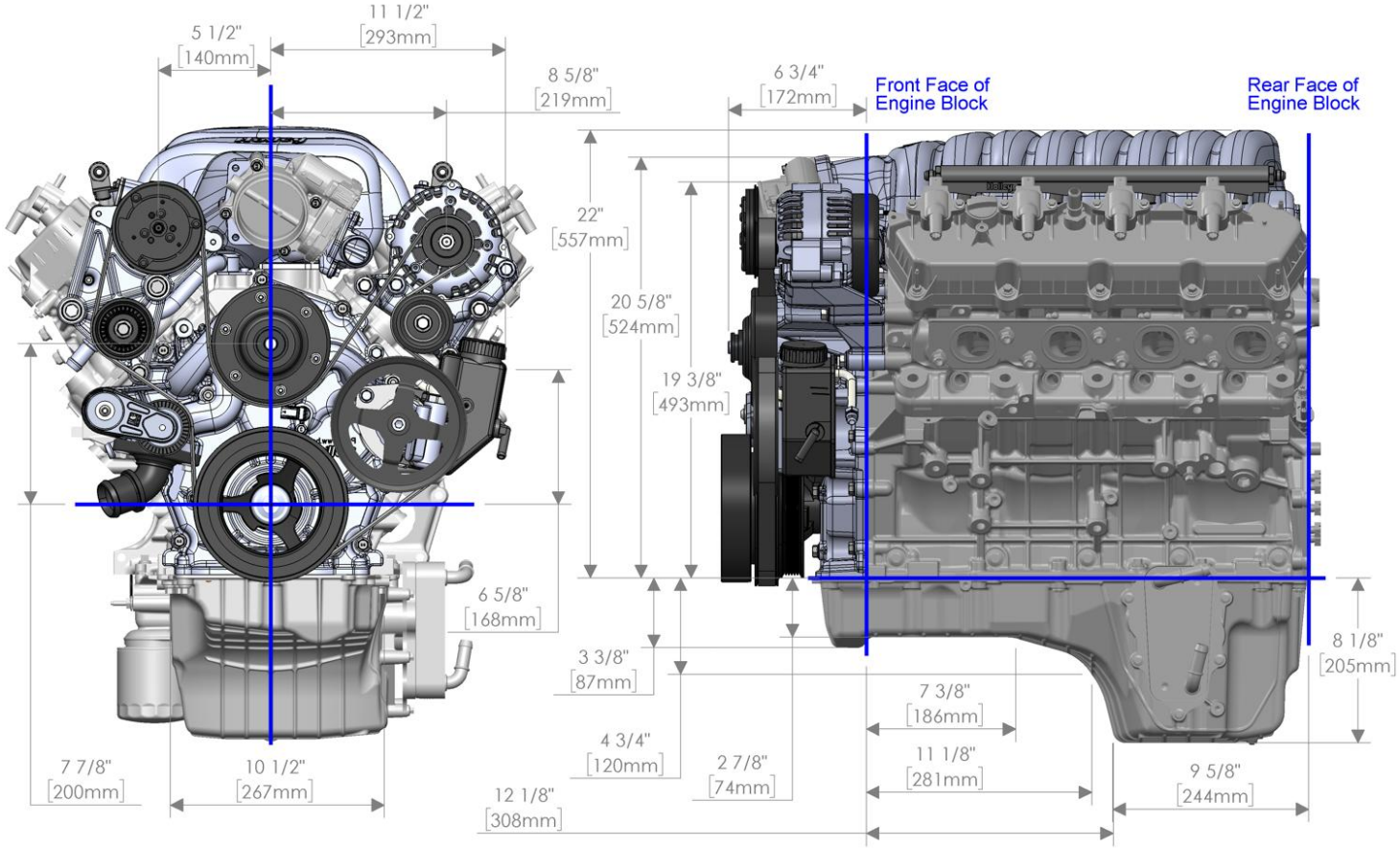

Introduction:

Holley's High-Mount Accessory Drive has all components pulled up and in tighter than other options. The patent pending accessory drive incorporates the timing cover, water pump, and alternator. It can also be configured with A/C and/or P/S if desired. This system works with the original crank pulley and aftermarket damper/pulleys.

- **Intake manifolds:** This accessory drive works with both the original intake and the Holley P/N 300-900 low-profile intake manifold.

- **Swap Applications:** This system provides additional accessory clearance for swap applications that work with the factory rear sump oil pan

- **External P/S Reservoir Option:** In some applications, the supplied reservoir may interfere with the vehicle. In these cases, a remote reservoir can be utilized. Holley P/N PS0001ERL will adapt the supplied P/S pump to a connection appropriate for use with a remote reservoir.

- **Hydro-Boost Applications:** Use adapter P/N PS0002ERL and P/S reservoir 198-211 or 198-212. These reservoirs have the additional inlet for the hydro-boost return.

MODULAR ACCESSORY OPTIONS:

When a base kit (20-300 or 20-300BK) is chosen, accessory drive components in this system can be configured in several different ways. For example, there are alternator options available for different performance and electrical demands. Also, deleting the A/C and/or P/S are options. The “base kits” supply all but the component’s with options. If you purchased a “Holley complete kit”, all these options are already chosen for the most common, cost effective combination. See the “Parts List” for items that will be included in these kits.

For those configuring a custom setup, review each section below. The part numbers in BLUE are your choices and may need to be purchased in addition to your “base kit”. Here you can review and decide which components will be required for your individual needs. When BLUE numbers are listed as XXX / ZZZ, the first is the natural version and the second, the black version of that component.

Assembly Instructions

IMPORTANT NOTE IF PAINTING COMPONENTS: The alternator and A/C compressor ground through the brackets. If painting or coating these brackets, the mating surfaces must all be bare metal allowing a ground path from the accessories’ mounting feet to the engine block and ultimately the negative terminal on the battery.

NOTE:

- Read the entire instruction sheet before beginning.
- It is important to follow all these instructions in the order below.

Oil Pan and Timing Cover Removal:

Remove the oil pan, damper pulley, and timing cover. Leave the oil pump, and oil pump drive assembly in place. Refer to engine maintenance handbook for disassembly details.

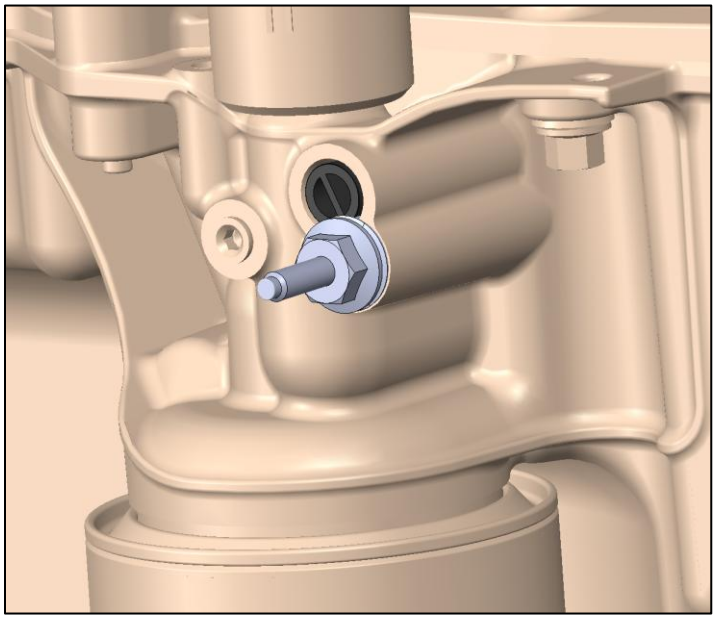

HELPFUL HINT: There is a black plastic oil return tube above the oil filter that must be removed *before* removing the oil pan. First, remove the retainer bolt. Next, using needle-nose pliers, pull the pin out**. It will be reinstalled during assembly.**

NOTE: Both the timing cover and oil pan are sealed with RTV sealant and will require light prying to remove. Tabs on the parts being removed are provided to help with this process.

The engine should be disassembled to appear similar as pictured to the right.

At this time, clean all RTV surfaces well with a scraper. Take care not to scratch the surfaces.

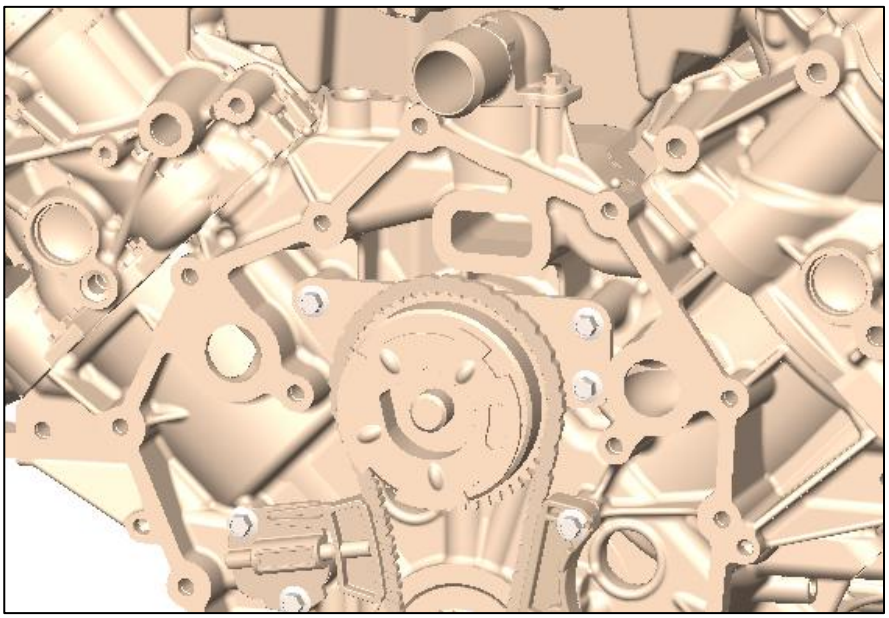

Heater Options and Timing Cover Assembly:

Components Required – 97-401 / 97-417 timing cover

Heater Options: P/N 97-425 heater delete kit -OR- 300-901 heater line adapter

- **Heater delete applications –** use **97-425** for specific components to block off the ports.
- **Heater applications –** Use **300-901** heater line adapter. This adapter will work with either the original Ford or Holley intakes and is required for A/C applications and the Holley low intake. The result is low, out of sight hose connections to the engine.
- **Heater applications with the factory intake manifold, but, without A/C –** This specific situation does not require a heater adapter kit. The upward pointing original heater tube can be used.

NOTE: The first step in installing the timing cover is to configure the heater hose ports for your application. The below steps will explain assembly if utilizing a heater with the 300-901 kit. If using 97-425 block off, follow direction included with that kit.

300-901 - Before installation, remove the original top heater tube from the top front of the engine block. Oil all O-rings and mating surfaces before assembly.

Install O-ring and retainer plate as shown below. Next, install the two M6 bolts included with the **300-901** as shown to the right.

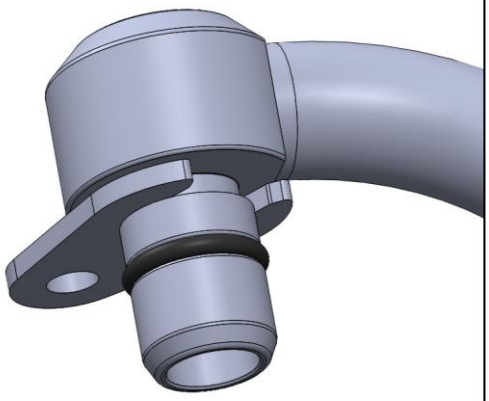

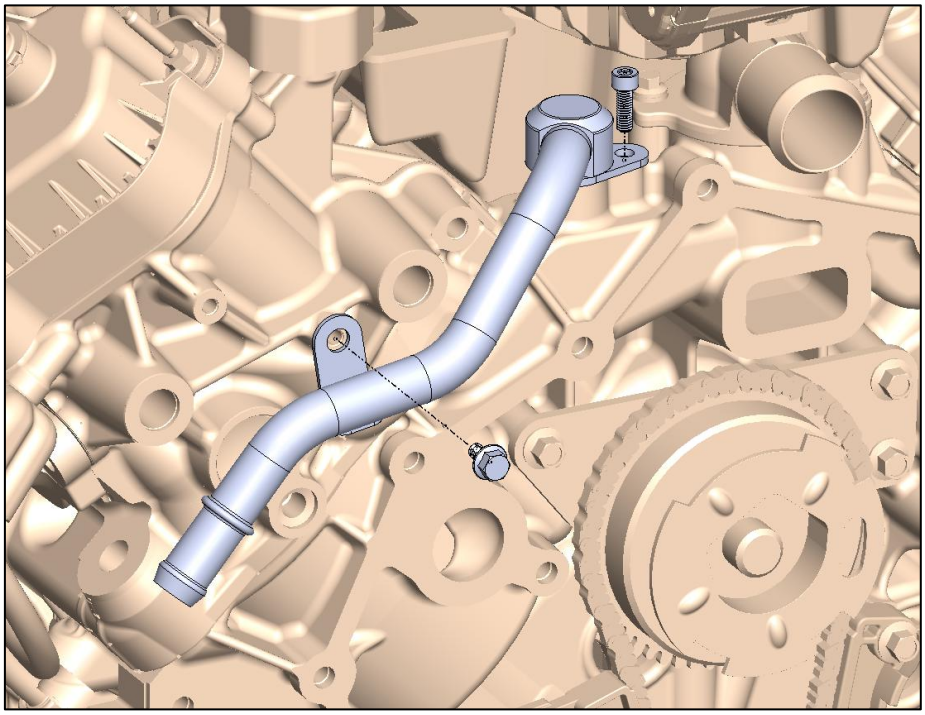

NOTE: Torque M6 bolts to 85 in./lbs

Install NPT adapter into passenger's side port.

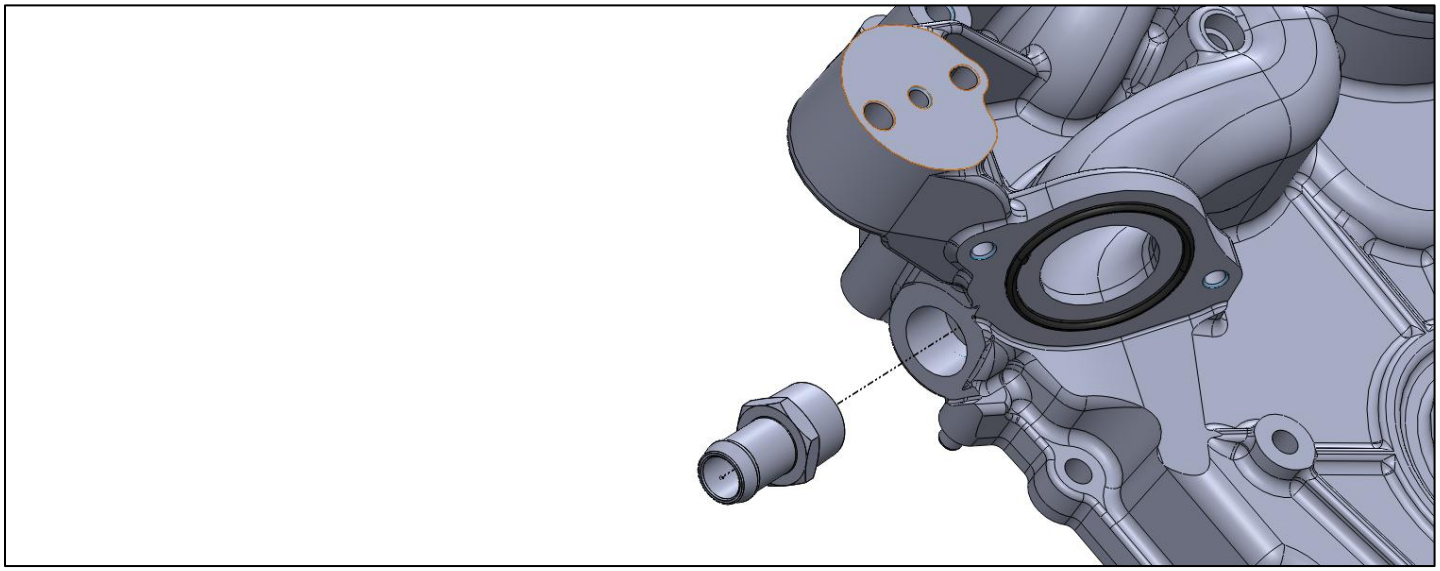

NOTE: On all NPT adapters, use thread sealant (Loctite® brand 567 pipe thread sealant or equivalent). Install to finger tight, and then tighten 2 to 3 rounds.

WARNING: Loosening NPT fittings after installation can cause leaks.

Reinstall all original sensors to the new timing cover.

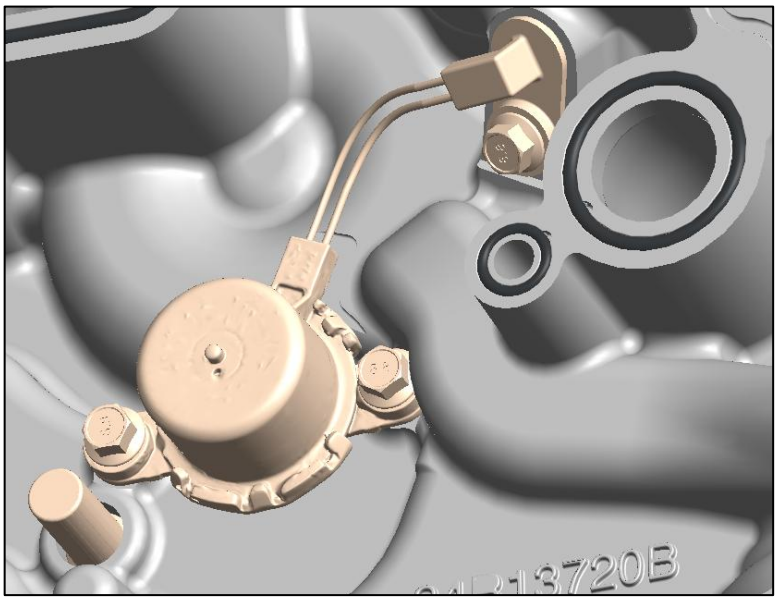

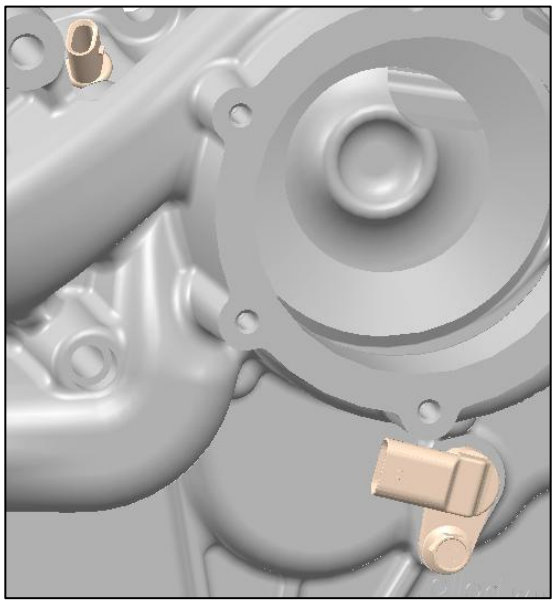

Water Pump and Gasket Installation:

Components Required –GM 12619770 gasket and 97-200 water pump assembly

NOTE: Make certain the gasket and pump are aligned to the dowel pin.

Warning: Do not overtighten water pump bolts.

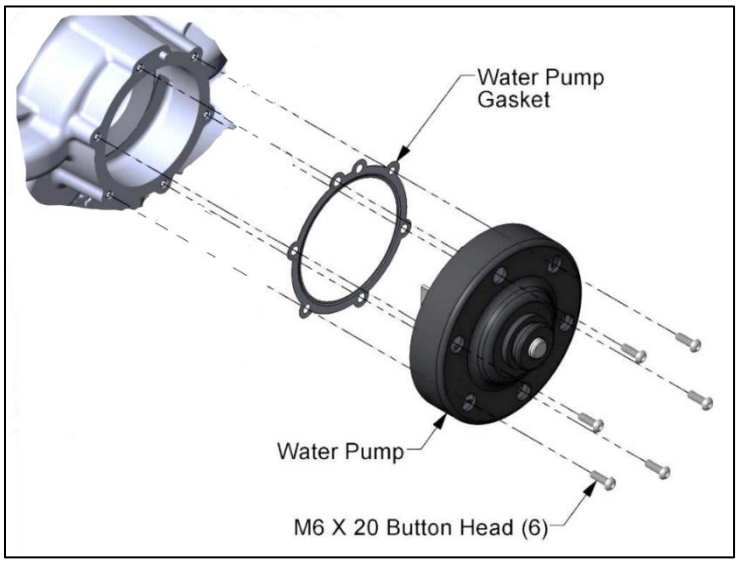

NOTE: Torque M6 bolts to 85 in./lbs

Next, inspect timing cover to confirm all O-rings and O-ring cord is installed and free of surface damage. Oil all O-rings. Confirm all the front sealing faces of the engine are clean and there are no deep scratches. If any imperfections are found, add RTV in these areas.

Timing Cover Installation:

NOTE: The oil pump chain and drive assembly have been visually removed in several of the following graphics to simplify instructions.

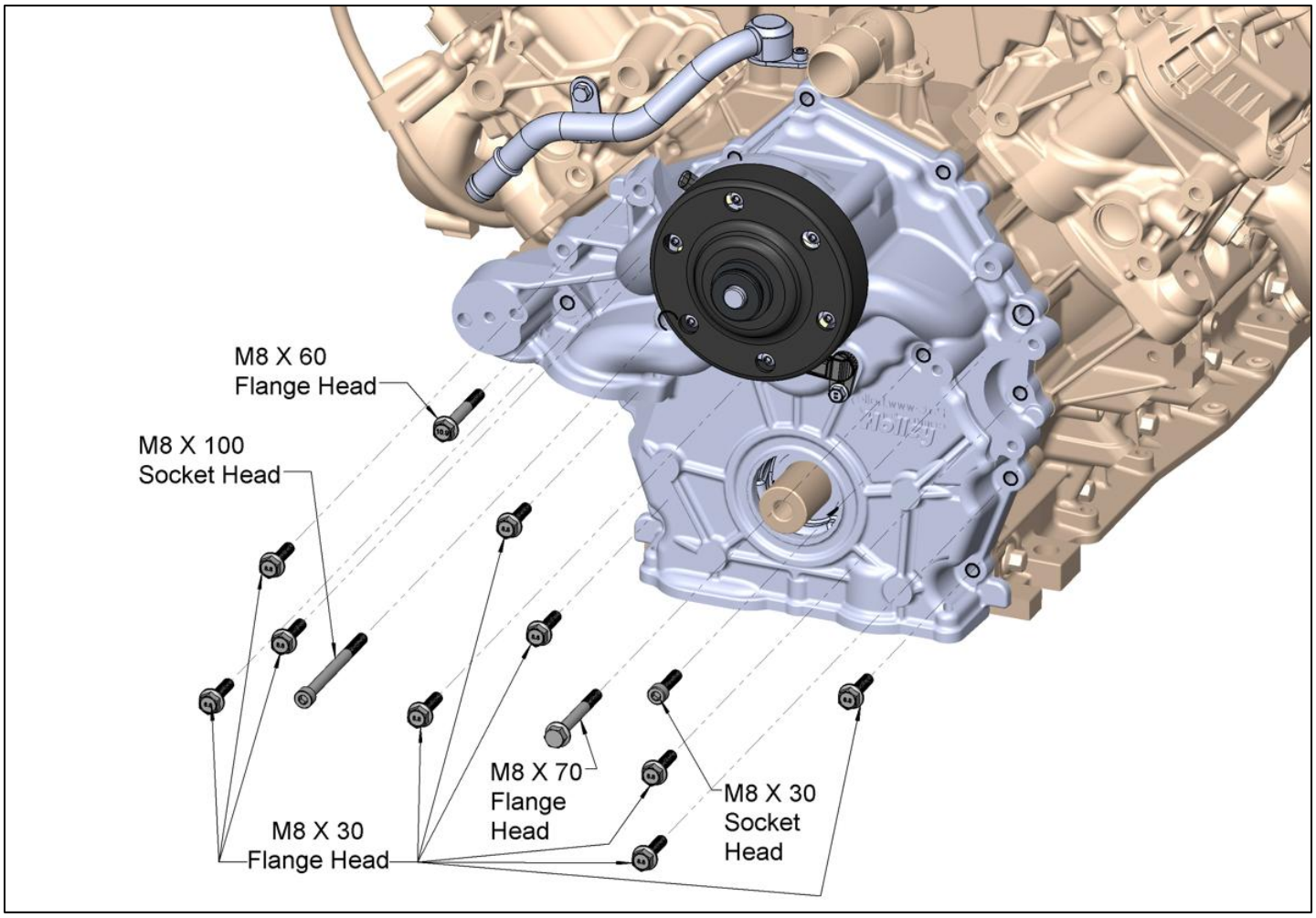

NOTE: Torque M8 bolts to 18 ft./lbs

Crank Seal Installation:

Components Required – Ford P/N GK2Z-6700-A seal and 97-400 disposable seal install tool.

The crankshaft seal is to be installed with the rubber side facing out towards the included install tool. Lubricating the seal with motor oil and place it on the tool's pilot. Place the seal and tool over the crankshaft and align to the timing cover.

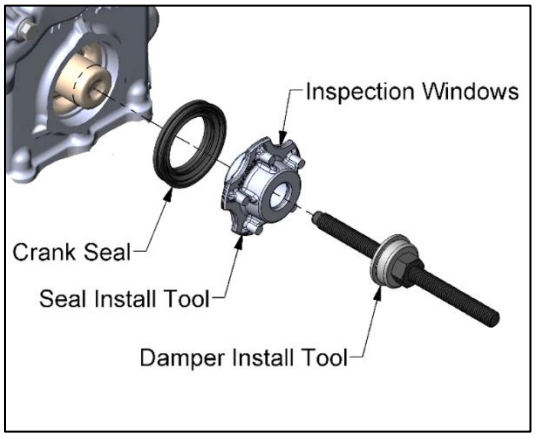

A damper installation tool must be used with the supplied install tool to seat the seal. This tool is typically available to rent from local auto parts retailers. Thread the damper installation tool into the crank by hand, then use a wrench on the nut of the tool to tighten until you feel the seal tool just bottom out on the front cover. Inspect the seal while tightening to ensure it presses in square to the timing cover. Visually confirm that the seal is flush to the cover.

Damper Pulley Installation:

Component Required – Ford P/N LC3Z-6A340-A damper bolt

If installing an aftermarket damper, see the manufacturer's directions. If reinstalling the original damper, follow the below.

1. Lubricate the outer surfaces on the damper pulley that will come into contact with the crank seal with motor oil.
2. Use the installation tool to press the damper pulley onto the crankshaft.

NOTE: For the tightening process, a flexplate locking tool should be used to prevent the engine from rotating.

3. When pressing the damper on, you should feel a notable stop when the damper bumps the oil pump drive gear.
4. Remove the damper install tool and install the included new OE damper bolt. The original damper bolt is torque-to-yield and cannot be reused.
5. Torque the damper bolt with the below torque sequence:

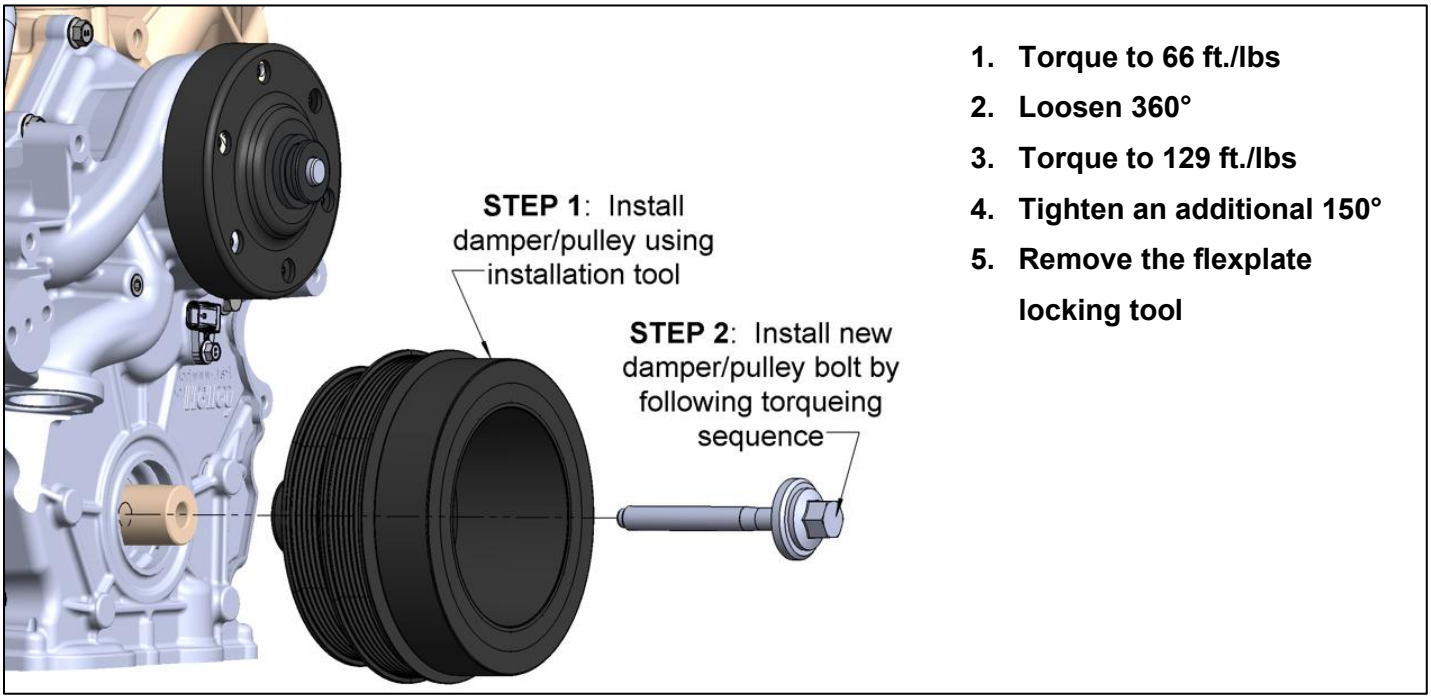

1. **Torque to 66 ft./lbs**
2. **Loosen 360°**
3. **Torque to 129 ft./lbs**
4. **Tighten an additional 150°**
5. **Remove the flexplate locking tool**

Water Inlet Options and Installation:

Inlet Options: – P/N 97-343, 97-341, -OR- Mopar 53021536AC

HELPFUL HINT: The Holley timing cover allows for different water inlets to make sourcing radiator hoses for your swap application easier. Complete kits includes a 45° swivel P/N 97-343. In addition to this angled adapter, the straight and 90° adapters can be sourced if that better fits your application.

Straight Mopar P/N 53021536AC

45° Holley P/N 97-343

90° Holley P/N 97-341

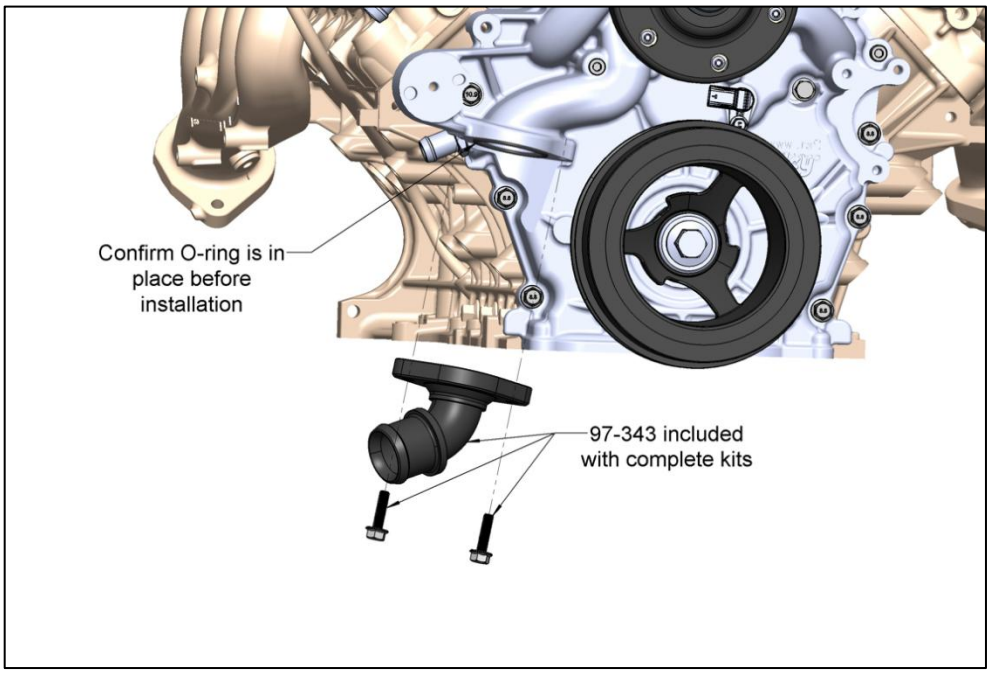

NOTE: Tighten bolts evenly to ensure an adequate seal. Torque M8 bolts to 18 ft./lbs.

Alternator Options and Installation:

Components Required – P/N 97-402 / 97-420 bracket, 97-150 idler, and 197-400 harness pigtail

Alternator Options: 197-300, 197-301, 197-302, -OR- 197-303

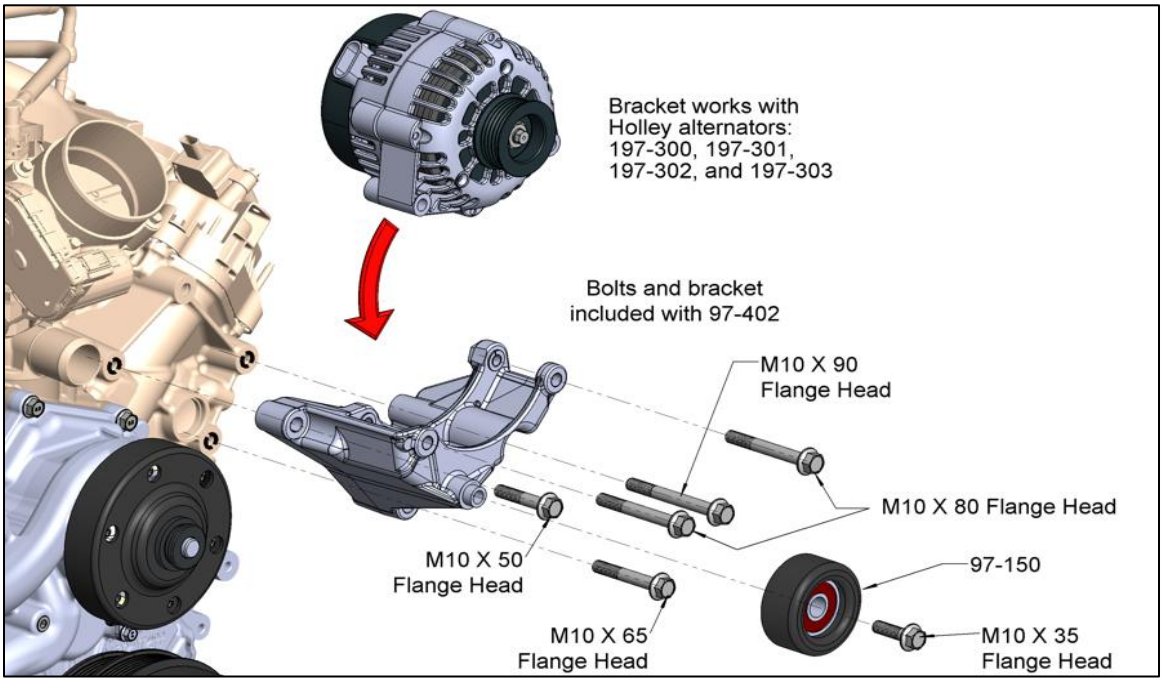

NOTE: Torque M10 bolts to 36 ft./lbs.

Alternator (Continued)

NOTE: For high RPM race applications, it is recommended to use one of Holley's Premium Alternators (197-302 or 197-303).

When wiring the alternator, install the 197-400 plug into the alternator. Next, connect the yellow wire to switched voltage that is "on" when the key is in the run position. If the vehicle has a "charge indicator light", the yellow wire can be connected to that circuit.

OPTIONAL ACCESSORY – P/S Pump/Reservoir Installation:

Components - 198-240 adapter, 97-152 pulley, and 198-104 P/S pump

1. Preinstall the -6 AN adapter/tube to power steering pump/reservoir at this time.

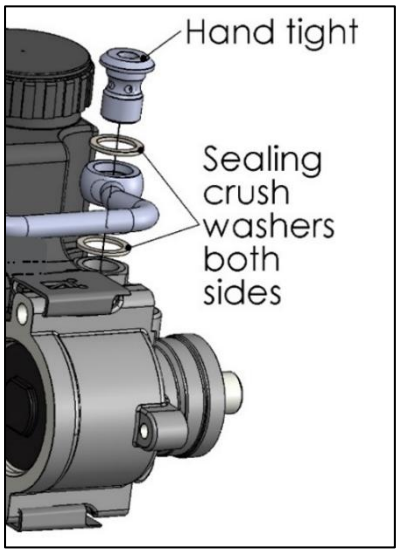

2. Install the power steering pulley using a pulley installer tool.

HELPFUL HINT: Pulley installation tools are available for rent at most auto parts stores.

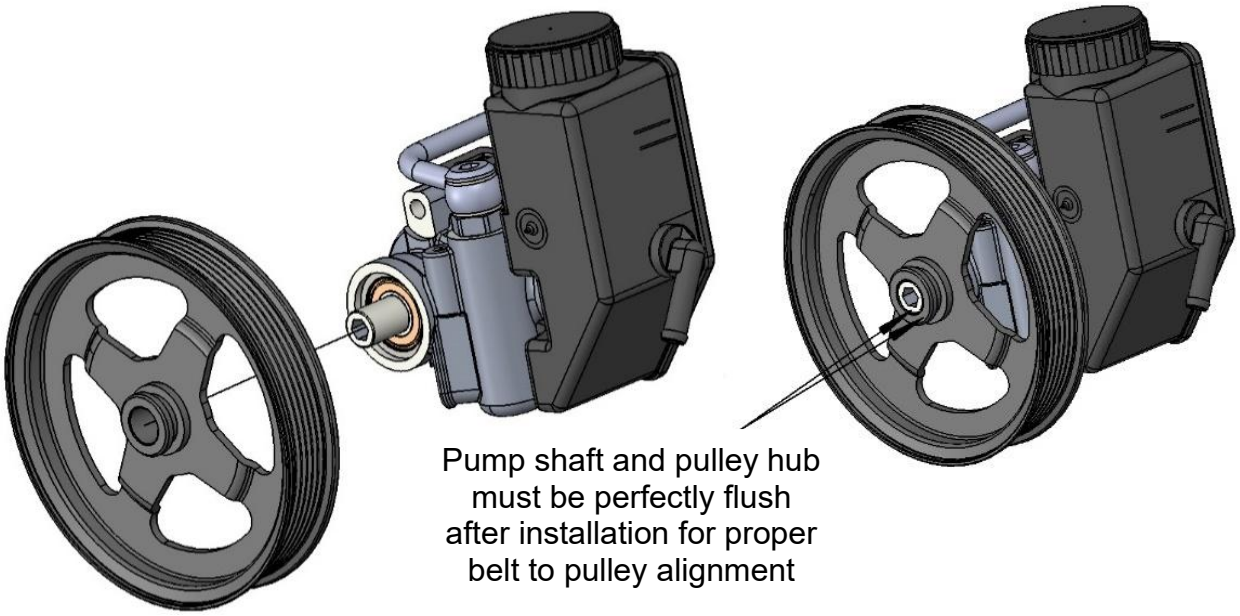

NOTE: See page 3 for remote and hydro-boost reservoir options if your application requires these.

3. Install pump assembly to engine

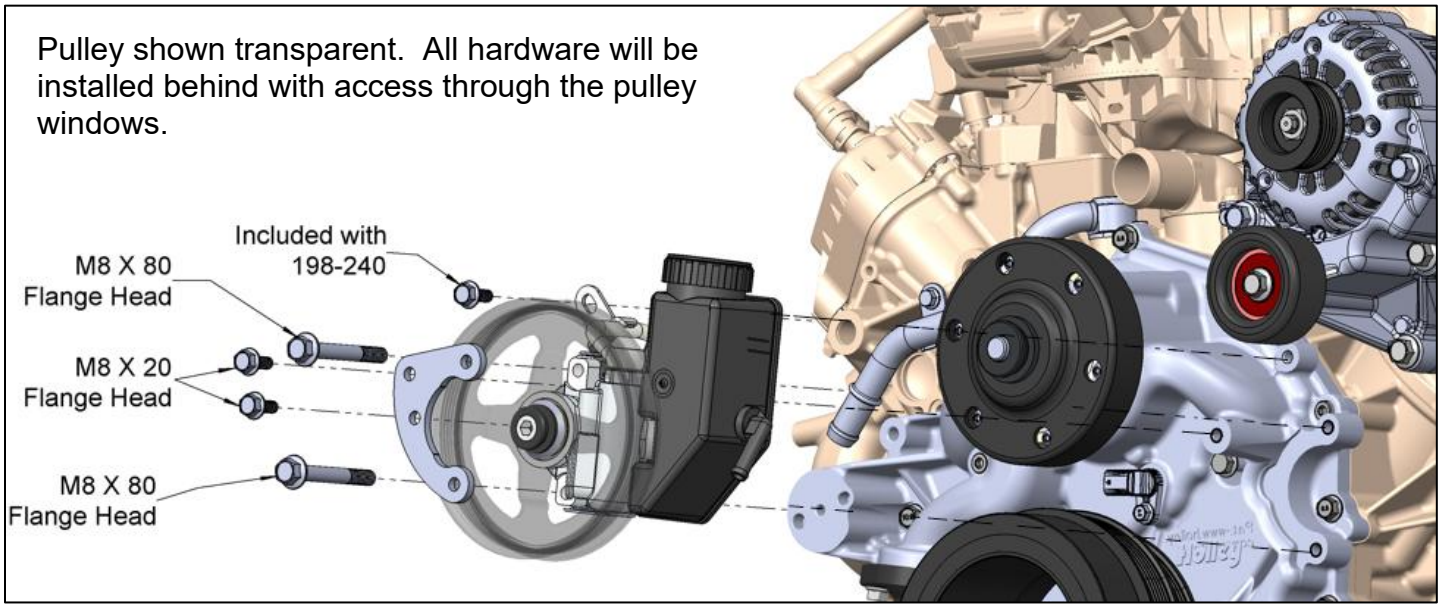

NOTE: Torque M8 bolts to 18 ft./lbs. Last, torque the banjo bolt on the AN adapter/tube to 25 ft./lbs.

OPTIONAL ACCESSORY – A/C Compressor Installation:

Components – P/N 199-102 / 199-104 compressor, 97-403 / 97-421 bracket, 97-404 grooved pulley, and 199-202 line adapter

1. Install compressor and grooved idler to bracket.

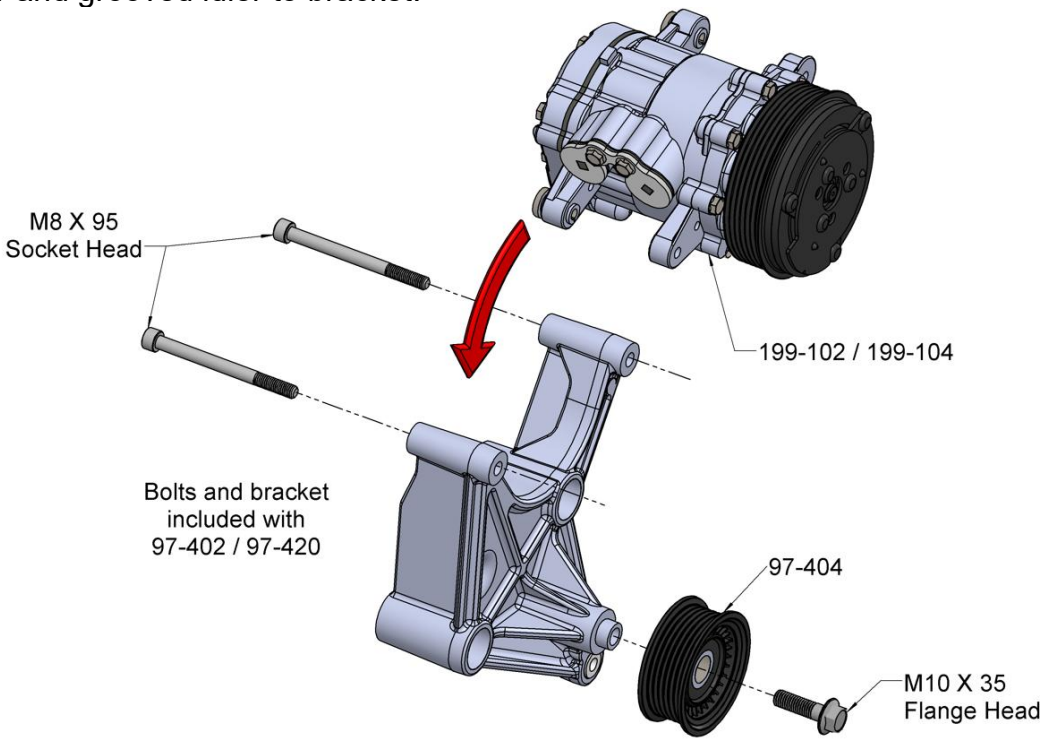

NOTE: Torque M8 bolts to 18 ft./lbs and M10 bolts to 36 ft./lbs.

2. Install bracket assembly to engine.

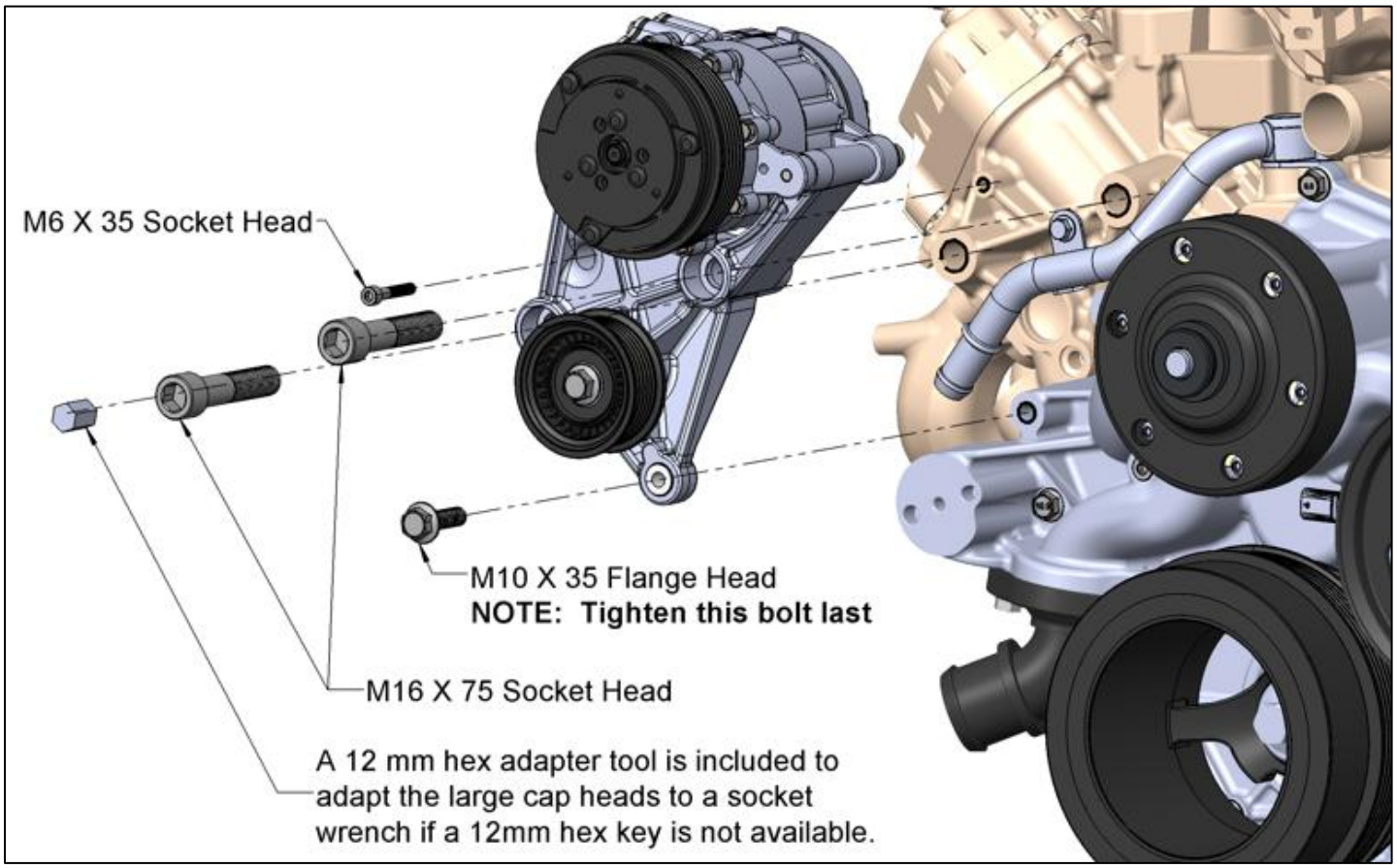

NOTE: Torque M6 bolts to 85 in./lbs. and M10 bolts to 36 ft./lbs, and M16 bolts to 120 ft./lbs

3. Install line adapter 199-202.

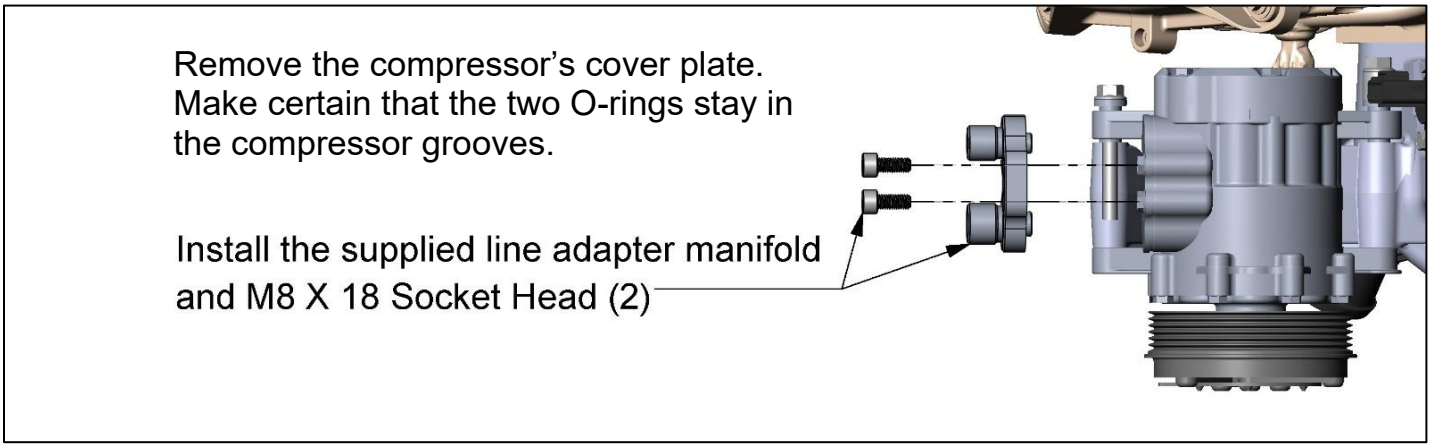

NOTE: Torque M8 bolts to 18 ft./lbs

Belt Tensioner Options and Installation:

Tensioner Options: P/N 97-179 -OR- 97-151

- If installing A/C:
  Component – 97-179 Tensioner

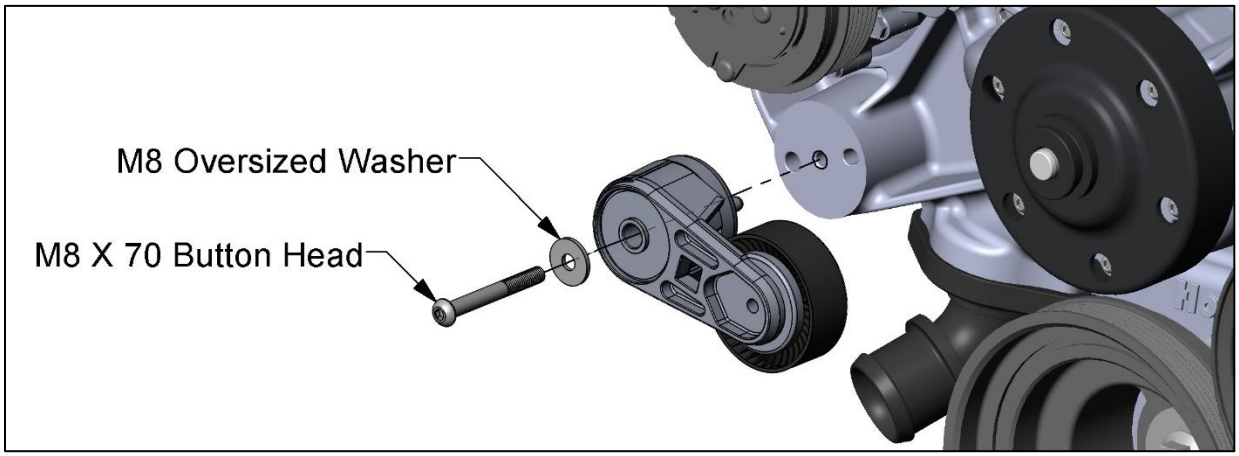

NOTE: Torque M8 bolt to 18 ft./lbs

- If NOT installing A/C:
  Component – 97-151 Tensioner

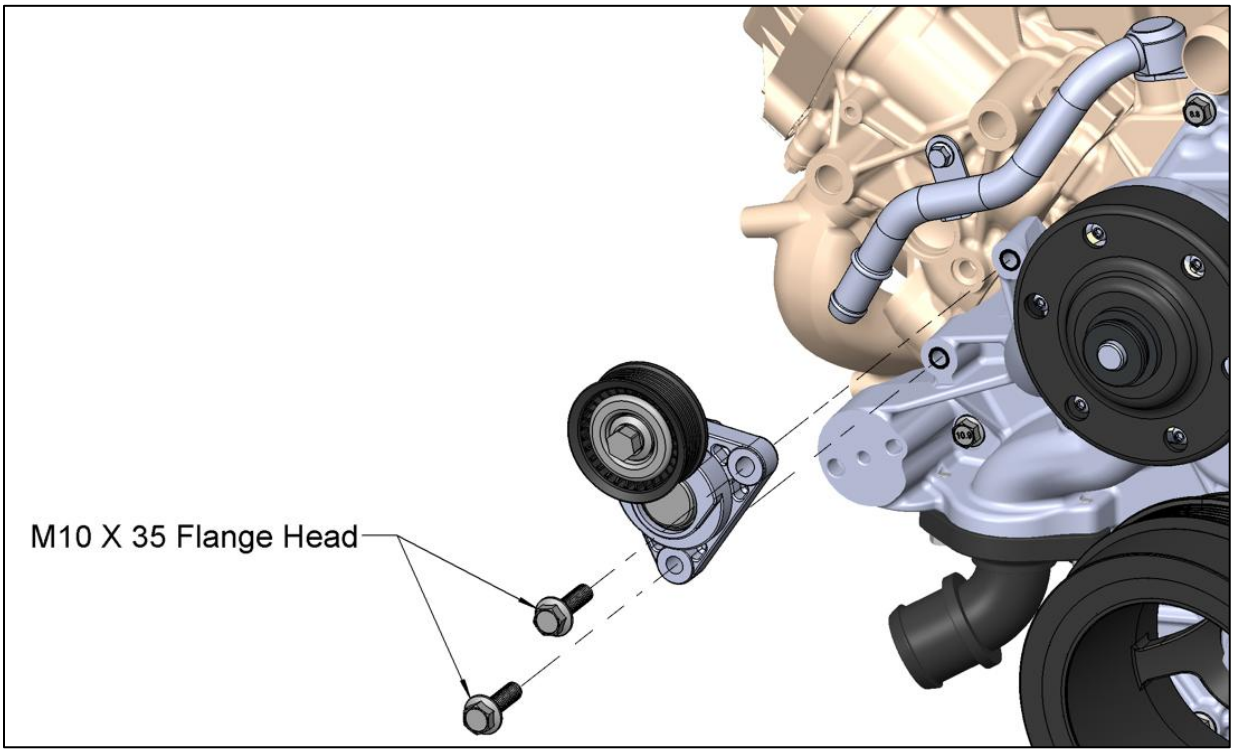

NOTE: Torque M10 bolts to 36 ft./lbs.

Belt Installation:

HELPFUL HINT: When installing the belt, route around all the pulleys except the water pump pulley. Slip the belt on the smooth water pump pulley last.

NOTE: All below are with a small case alternator. If using a large case alternator, a slightly longer belt will be required.

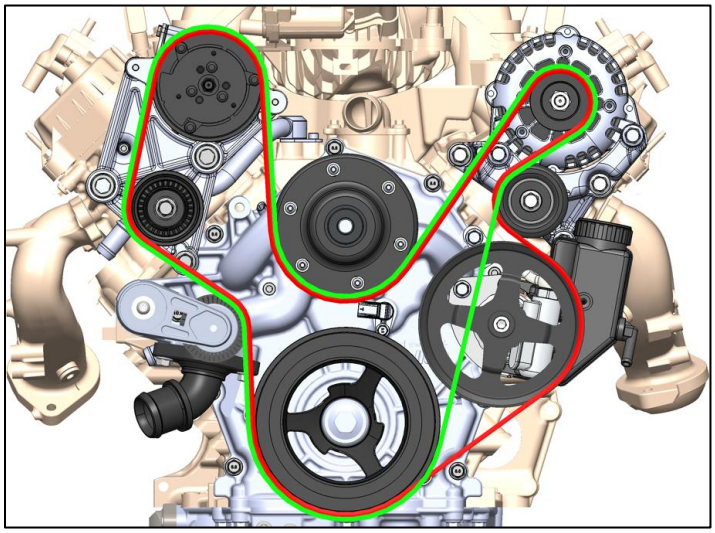

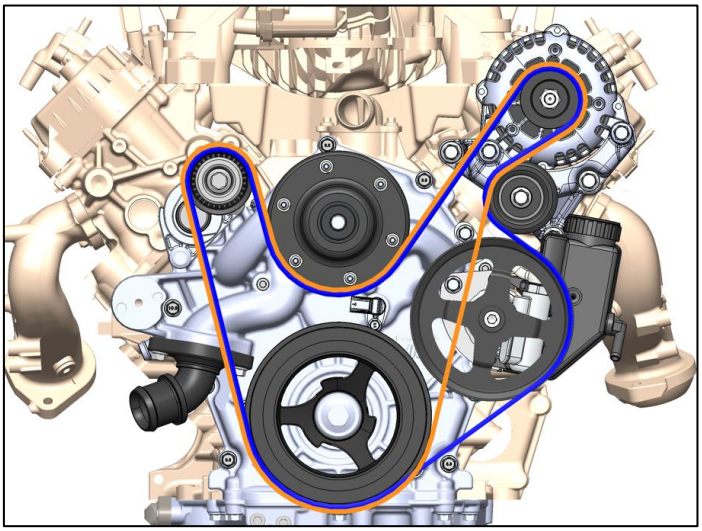

With All Accessories Including A/C and Power Steering – 6PK2010 Belt

Power Steering Delete – 6PK1885 Belt

A/C Delete – 6PK1685 Belt

A/C and Power Steering Delete – 6PK1560 Belt

OPTIONAL ACCESSORIES – Pulley and Tensioner Covers:

Components – P/N 97-185 A/C cover, 97-187 alternator cover*, and 97-158 tensioner cover**

Cosmetic covers are included with some kits. If not included, these can be purchased individually. See instructions included with cover for installation procedures.

NOTE:
*Alternator cover only works with Holley premium alternators (P/N's 197-302 and 197-303).
**Tensioner cover works only with Holley tensioner P/N 97-179.

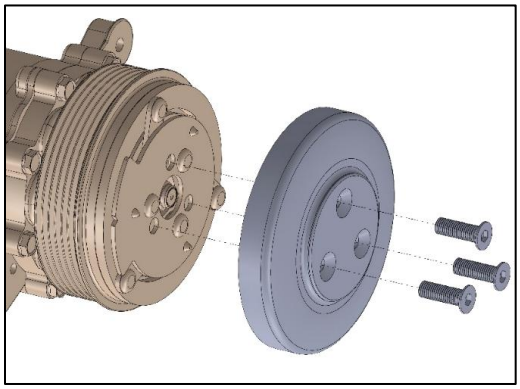

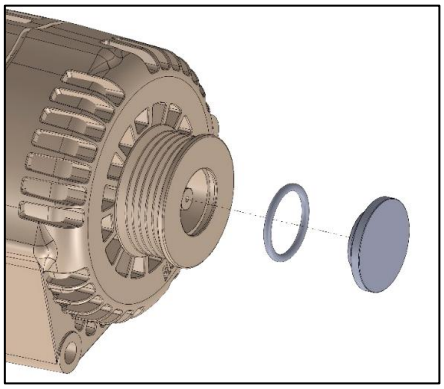

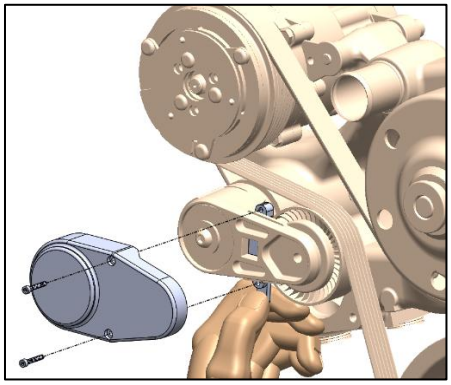

Oil Pan Reinstallation:

1. Trim the O-ring cord ends at the bottom of the front cover as shown to right.

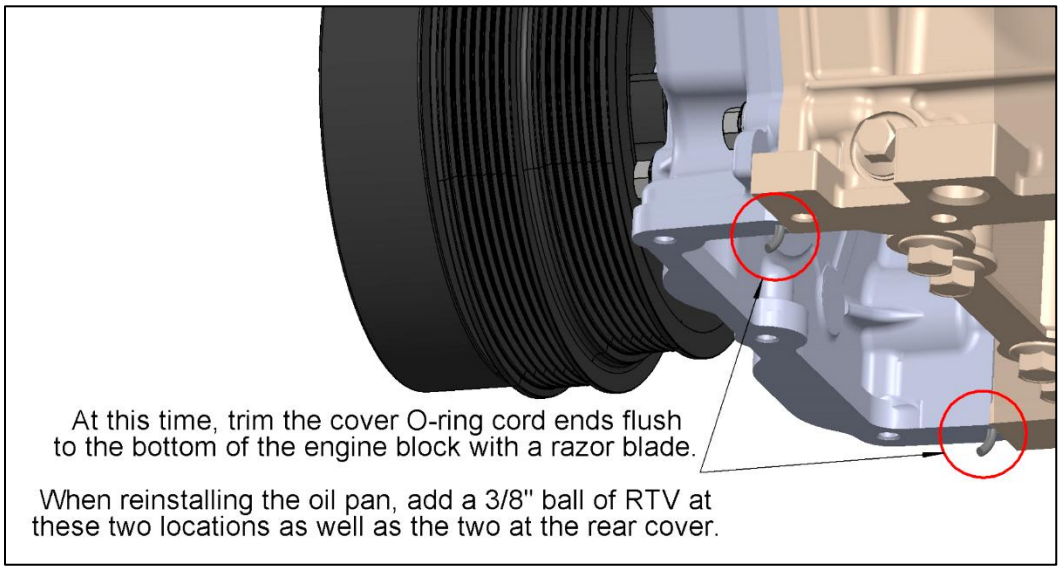

NOTE: The oil pump drive chain and drive assembly have been visually removed in the above graphic to better show areas to cut.

WARNING – It is strongly recommended that the oil pan be installed per the engine manufacturer's specified process. The below is only an overview.

2. Before assembly, inspect oil pan and components to ensure they are free from contaminants. Flush all passages to confirm there are no unseen contaminates.

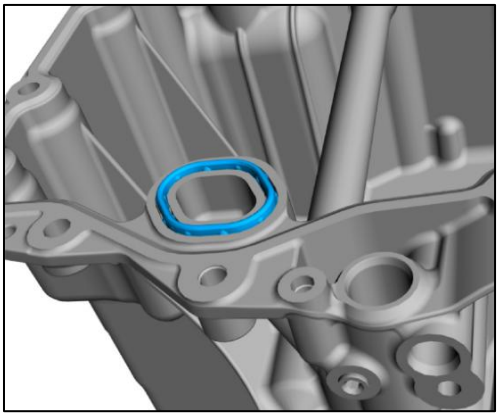

3. Confirm both the oil pan top flange and bottom engine surfaces are cleaned of all RTV.

4. Confirm the oil pan's rear O-ring, shown to right, is in good condition and in place. If replacement is required, purchase Ford P/N LC3Z-6710-A.

5. Apply a 3/16" bead of RTV around the pan's top flange.

6. Add a 3/8" ball of RTV at the four (x4) points that the front and rear engine covers meet the block.

7. Install the pan to the engine using the original hardware. For bolts in the 11, 12 & 15 positions, you will need to use the 30mm long bolts from the timing cover hardware kit.

8. Torque the bolts to 16 ft./lbs starting with the center bolt on each side and working outward in an even pattern as shown to right.

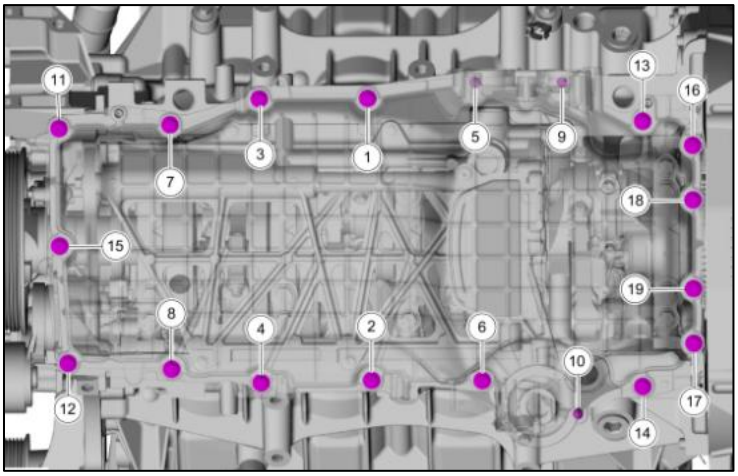

9. Reinstall the black plastic oil return tube. Oil only the inside two O-rings shown below. Tighten stud bolt to 11 ft./lbs.

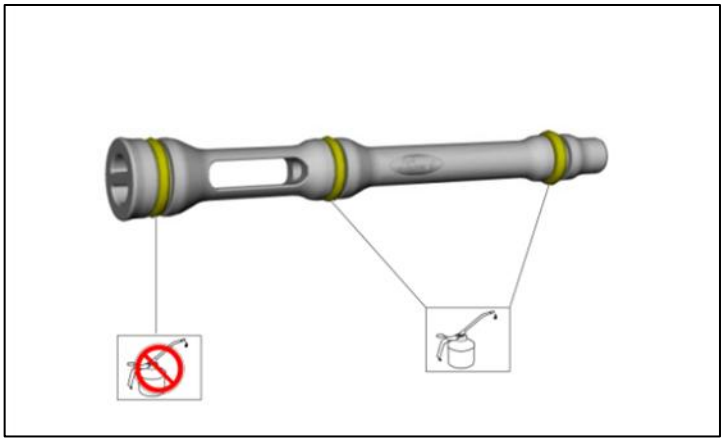

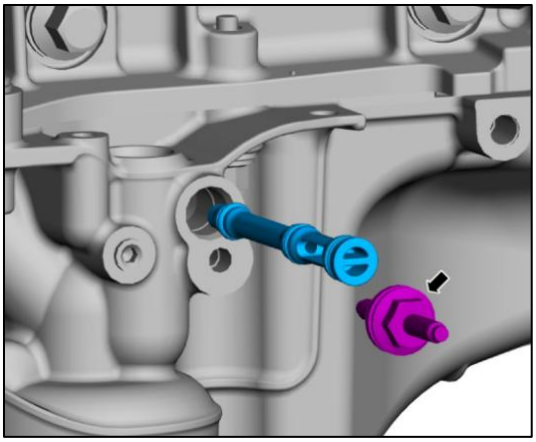

10. Reconnect sensor connectors and harness retainers.

11. Install the oil filter.

12. Fill engine with oil referencing the dipstick markings.

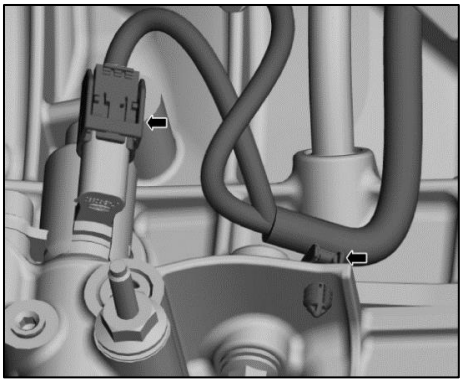

Installation is complete. Inspect all connections and fasteners, start engine and confirm no leaks.

Holley® Performance Products, Inc.
1801 Russellville Road
Bowling Green, KY 42101

Technical Support: 1-866-464-6553
Phone: 1-270-781-9741
www.holley.com

© 2022 Holley Performance Products, Inc. All rights reserved. Tous Droits Réservés

199R12403

Date: 11-14-22