MSD INSTALLATION INSTRUCTIONS

MSD 6 Series

6A, PN 6200; 6AL, PN 6420; 6T, PN 6400; 6BTM, PN 6462; 6ALN, PN 6430

Parts Included:

1 - MSD 6 Series Ignition
1 - Harness, PN 8860
1 - Harness, PN 8861
1 - 18" Ground Wire
1 - White Jumper
1 - Red Jumper
4 - 45° Faston Terminals
4 - #8 x 3/4" Screws
2 - 10-32 x 1/2" Screws
4 - 10-32 Hex Nuts
6 - #10 Lock Washers
1 - 100V/1A Diode
4 - Wire Splicers
2 - Wire Ties
1 - Faston Receptacle
2 - Faston Straight Terminals

6T, 6AL 6ALN, 6BTM, Only:
4 - Vibration Mounts and Hardware

6AL, 6ALN, Only:
4 - RPM Modules, 3,000, 6,000, 7,000, 8,000

WARNING: During installation, disconnect the battery cables. When disconnecting the battery always remove the Negative cable first and install it last.

Note: Solid Core spark plug wires **cannot** be used with an MSD Ignition.
Note: An MSD 6 Series **cannot** be used with distributorless ignition systems (DIS).

THEORY OF 6 SERIES IGNITION

CAPACITIVE DISCHARGE

The MSD 6 Series Ignitions feature a capacitive discharge ignition design. The majority of stock ignition systems are inductive ignitions. In an inductive ignition, the coil must store and step up the voltage to maximum strength in between each firing. At higher rpm, since there is less time to charge the coil to full capacity, the voltage falls short of reaching maximum energy which results in a loss of power or top end miss.
The MSD Ignition features a capacitor which is quickly charged (within one millisecond) with 460 - 480 volts and stores it until the ignition is triggered. With the CD design, the voltage sent to the coil is always at full power even at high rpm.

MULTIPLE SPARKS

The MSD 6 Series produces full power multiple sparks for each firing of a plug. The number of multiple sparks that occur decreases as rpm increases, however the spark series always lasts for 20° of crankshaft rotation. Above 3,000 rpm there is simply not enough "time" to fire the spark plug more than once, so there is only one powerful spark.

REV LIMITER

6AL, 6ALN, 6BTM: These ignitions are equipped with built-in Adjustable Soft Touch Rev Controls. MSD Rev Limiters are adjustable with plug-in modules which are available in 100 rpm increments. The Soft Touch circuitry provides a smooth and accurate rev limit by dropping the spark to individual cylinders. The Soft Touch produces a load-free rev limit that is within 1% of the selected rpm.

MSD 6T, 6TN

These Ignitions feature a special 4-wire connector which plugs directly into an external rev limiter; the MSD **PN 8738 Rev Control** or the **Soft Touch Engine Control, PN 8968**. The PN 8738 is a single rev limit only, while the PN 8968 features two rev limits and an RPM Activated Switch.

GENERAL INFORMATION

BATTERY

An MSD 6 Series Ignition Control will operate on any negative ground, 12 volt electrical system with a distributor. The MSD can be used with 16 volt batteries and can withstand a momentary 24 volts in case of jump starts. The Ignitions will deliver full voltage with a supply of 9 - 18 volts and will operate with a supply voltage as low as five volts.

If your application does not use an alternator, allow at least 15 amp/hour for every half hour of operation. If the engine is cranked with the same battery or other accessories such as an electric fuel or water pump are used, the amp/hour rating should be higher.

COILS

The MSD 6 Series Ignitions can be used with most stock coils and aftermarket coils designed to replace the stock coils. There are some "race only" coils such as the MSD Pro Power Coil, PN 8201, that **cannot** be used with a 6 Series MSD Ignition Control. For more information on recommended coils, consult the supplied Coil Application Chart or check with the manufacturer of your coil. If you have any questions concerning coils, contact our Customer Service Department at (915) 855-7123.

TACHOMETERS

The MSD Ignition features a Tach Output Terminal on the side of the unit. This terminal provides a trigger signal for tachometers, a shift light or other add-on rpm activated devices. The Tach Output Terminal produces a 12 volt square wave signal with a 20% duty cycle.

Some vehicles with factory tachometers may require a Tach Adapter to operate with the MSD. For more information on Tachometers and MSD Tach Adapters, see the Tachometer Section on page 7.

If your GM vehicle has an inline filter it may cause the tach to drop to zero on acceleration. If this occurs, bypass the filter.

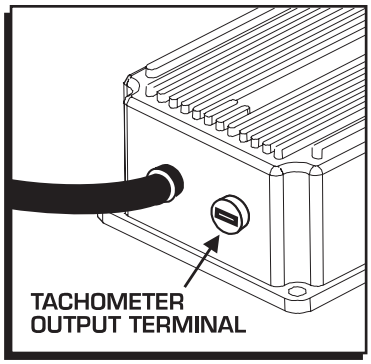

Figure 1 Tach Terminal

FOREIGN VEHICLES

Due to the fuel injection systems, some foreign vehicles may require a special Tach/Fuel Injection Adapter to use an MSD Ignition. See pages 7 for wiring and Tach Adapter information.

Note: Vehicles originally equipped with a CD ignition control **cannot** use an MSD.

SPARK PLUGS AND WIRES

Spark plug wires are very important to the operation of your ignition system. A good quality, helically wound wire and proper routing are required to get the best performance from your ignition, such as the MSD Heli-Core or 8.5mm Super Conductor Wire.

Note: Solid Core spark plug wires cannot be used with an MSD Ignition.

A helically, or spiral wound wire must be used. This style wire provides a good path for the spark to follow while keeping Electro Magnetic Interference (EMI) to a minimum. Excessive EMI, such as the amount that solid core wires produce, will interfere with the operation of the MSD.

Routing: Correct routing of the plug wires is also important to performance. Wires should be routed away from sharp edges and engine heat sources. If there are two wires that are next to each other in the engine's firing order, the wires should be routed away from each other to avoid inducing a spark into the other wire. For example, in a Chevy V8, the firing order is 1-8-4-3-6-**5**-**7**-2. The #5 and #7 cylinders are next to each other in the engine and in the firing order. If the voltage from the #5 wire is induced into #7 detonation could occur and cause engine damage.
To add more heat protection to your plug wires, MSD offers Pro-Heat Guard, PN 3411. This is a glass woven and silicone coated protective sleeve that you slide over your plug wires. For extra protection of the spark plug boots, MSD offers Pro-Heat Boot Guard, PN 3412.

Spark Plugs: Choosing the correct spark plug design and heat range is important when trying to get the best performance possible. Since there are so many engine combinations and manufacturers, MSD does not recommend which plug or gap is exactly right for your application.
It is recommended to follow the engine builder or manufacturer's specification for spark plugs. With that, you can then experiment with the plug gap to obtain the best performance. The gap of the plugs can be opened in 0.005" increments, then tested until the best performance is obtained. MSD judges the plug gap by compression and components:

These examples are just starting points to get you going in the right direction. Every application is different and should be tested and tuned.

Compression	Spark Plug Gap
Up to 10.5:1:	0.050" - 0.060"
10.5:1 - 13.0:1:	0.040" - 0.050"
Above 13.0:1:	0.035" - 0.045"

MISCELLANEOUS INFORMATION

Sealing: Do not attempt to seal the MSD. All of the circuits of an MSD receive a thick conformal coating of Humi-Seal. This sealant protects the electronics from moisture. If you were to seal the unit, any moisture or water that may seep in through the wiring grommets will not be able to drain and may result in corrosion.

Welding: If you are welding on your vehicle, to avoid the chance of damage, always disconnect both Heavy Power cables of the MSD (You should also disconnect the tach ground wire too).

Distributor Cap and Rotor: It is recommended to install a new distributor cap and rotor when installing the MSD Ignition Control. The cap should be clean inside and out especially the terminals and rotor tip. On vehicles with smaller caps, it is possible for the air inside the cap to become electrically charged causing crossfire which can result in misfire. This can be prevented by drilling a couple vent holes in the cap. The holes should be placed between the terminals, at rotor height and face away from the intake. If your environment demands it, place a small piece of screen over the hole to act as a filter.

Initial Spark: It is normal, yet not very common, for the MSD to produce a spark when the ignition key is turned On. This is due to the capacitor being charged and if the pickup is in the right position, it could trigger the ignition momentarily. This could also occur when installing the positive battery cable.

MOUNTING

The MSD can be mounted in most positions, except directly upside down (if upside down, moisture or water cannot escape). It can be mounted in the engine compartment as long as it is away from direct engine heat sources. It is not recommended to mount the unit in an enclosed area such as the glovebox.
When you find a suitable location to mount the unit, make sure the wires of the ignition reach their connections. Hold the Ignition in place and mark the location of the mounting holes.

- If you have a 6A Ignition, use an 1/8" drill bit to drill the holes. Use the supplied self tapping screws to mount the box.
- If you have a 6AL, 6T, 6BTM, 6-Offroad or "N" Series, use a 3/16" drill bit and drill the holes for the supplied vibration mounts. Install the vibration mounts, then mount the Ignition.

CYLINDER SELECT

Note: The 6A, 6T and 6TN do not require any modifications to run on 4 or 6-cylinder even-fire engines.

The Soft Touch Rev Limiter that is built into the MSD 6AL, 6BTM and 6ALN is programmed for operation on a 8-cylinder engine. If you are installing one of these units on a 4 or 6-cylinder even-fire engine, the ignition must be modified. This is easily achieved through the cylinder select device on the side of the ignition. To program the unit:

1. Locate and remove the round black cover with a single Phillips screw.
2. There are two wire loops, a Red and Blue loop. Refer to the chart in Figure 2 to determine which loop to cut for your application.
3. After cutting the loop(s), turn the wire ends away from each other so they cannot come into contact. Install the cover and screw.

CYLINDERS	CUT LOOPS
8	NONE
6	RED
4	RED & BLUE

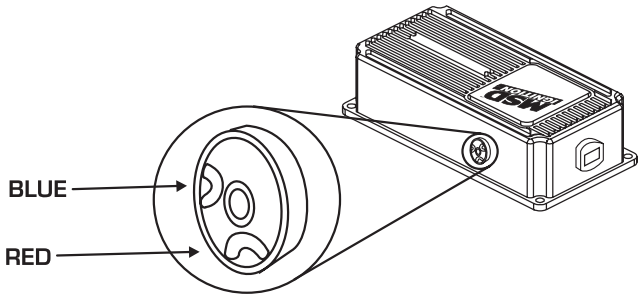

Figure 2 Selecting the number of Cylinders.

WIRING

GENERAL WIRING INFORMATION

Wire Length: All of the wires of the MSD Ignition may be shortened as long as quality connectors are used or soldered in place. To lengthen the wires, use one size bigger gauge wire (10 gauge for the power leads and 16 gauge for the other wires) with the proper connections. All connections must be soldered and sealed.

Grounds: A poor ground connection can cause many frustrating problems. When a wire is specified to go to ground, it should be connected to the battery negative terminal, engine block or chassis. There should always be a ground strap between the engine and the chassis. Always securely connect the ground wire to a clean, paint free metal surface.

Ballast Resistor: If your vehicle has a ballast resistor in line with the coil wiring, it is recommended to bypass it.

ROUTING WIRES

The MSD wires should be routed away from direct heat sources such as exhaust manifolds and headers and any sharp edges. The trigger wires should be routed separate from the other wires and spark plug wires. It is best if they are routed along a ground plane such as the block or firewall which creates an electrical shield. The magnetic pickup wires should always be routed separately and should be twisted together to help reduce extraneous interference.

WIRE FUNCTIONS

POWER LEADS	These are the two heavy gauge wires (12 gauge) and are responsible for getting direct battery voltage to the Ignition. The ignition has an internal fuse so no fuse is necessary.
HEAVY RED	This wire connects directly to the battery positive (+) terminal or to a positive battery junction or the positive side of the starter solenoid. **Note:** Never connect the alternator.
HEAVY BLACK	This wire connects to a good ground, either at the battery negative (-) terminal or to the engine.
RED	Connects to a switched 12 volt source. Such as the ignition key or switch.
ORANGE	Connects to the positive (+) terminal of the coil. **This is the only wire that makes electrical contact with the coil positive terminal.**
BLACK	Connects to the negative (-) terminal of the coil. **This is the only wire that makes electrical contact with the coil negative terminal.**
TRIGGER WIRES	There are two circuits that can be used to trigger the MSD Ignition; a Points circuit (White wire) and a Magnetic Pickup circuit (Violet and Green wires). The two circuits will **never** be used together.
WHITE	This wire is used to connect to the points, electronic ignition amplifier output or to the Yellow wire of an MSD Timing Accessory. **When this wire is used, the Magnetic Pickup connector is not used.**
VIOLET AND GREEN (MAGNETIC PICKUP CONNECTOR)	These wires are routed together in one harness to form the Magnetic Pickup connector. The connector plugs directly into an MSD Distributor or Crank Trigger. It will also connect to factory magnetic pickups or other aftermarket pickups. The Violet wire is positive (+) and the Green is negative (-). **When these wires are used, the White wire is not.**

The chart shows the polarity of other common magnetic pickups. If using a different magnetic pickup, use the MSD 2-Pin connector, available as PN 8824, for a direct plug-in installation.

Common Mag Pickup Wires		
Distributor	Colors	
	Mag+	Mag-
MSD	Org/Blk	Vio/Blk
MSD Crank Trigger	Violet	Green
Ford	Orange	Violet
Accel 46/48000 Series	Org/Blk	Vio/Blk
Accel 51/61000 Series	Red	Black
Chrysler	Org/Wht	Black
Mallory	Org/Blk	Vio/Blk

Figure 3 Common Mag Pickup Wires.

WARNING: The MSD 6 Series Ignitions are capacitive discharge ignitions. High voltage is present at the coil primary terminals. Do not touch the coil or connect test equipment to the terminals.

PRESTART CHECK LIST

- The only wires connected to the coil terminals are the MSD Orange to coil positive and Black to coil negative.
- The small Red wire of the MSD is connected to a switched 12 volt source.
- If running a 6AL, 6BTM or 6ALN on a 4 or 6-cylinder engine the cylinder select must be modified.
- The MSD power leads are connected directly to the battery positive and negative terminals.
- The battery is connected and fully charged if not using an alternator.
- The engine is equipped with at least one ground strap to the chassis.

Note: The voltage at the small red wire of the MSD must not drop below 10 volts while cranking in order to fire.

THEFT DETERRENT

The MSD provides the opportunity to easily install a theft deterrent kill switch (Figure 4).

White Wire Trigger

When using the WHITE wire to trigger the MSD, install a switch across the magnetic pickup VIOLET wire to ground. When the VIOLET wire is grounded, the vehicle will crank but not start.

Magnetic Pickup Trigger

When using the mag pickup to trigger the MSD, install a switch to the WHITE wire and the other side to ground. When the WHITE wire is grounded, the vehicle will crank but will not start.

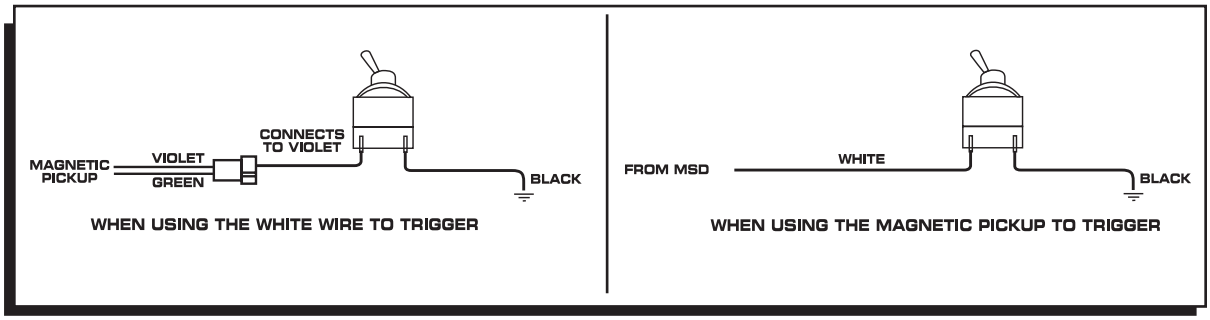

Figure 4 Connecting a Theft Deterrent Switch Through the MSD Ignition.

TROUBLESHOOTING

Every MSD Ignition undergoes numerous quality control checks including a four hour burn-in test. If you experience a problem with your MSD, our research has shown that the majority of problems are due to improper installation or poor connections.
The Troubleshooting section has several checks and tests you can perform to ensure proper installation and operation of the MSD. If you have any questions concerning your MSD, call our Customer Support Department at (915) 855-7123, 7 - 6 mountain time.

TACH/FUEL ADAPTERS

If your tachometer does not operate correctly or if you experience a no-run situation with your foreign vehicle you probably need an MSD Tach Adapter. The chart below lists common tachometers and if an Adapter is necessary.

Tachometer Compatibility List

AFTERMARKET TACHOMETER	WHITE WIRE TRIGGER	MAGNETIC TRIGGER CONNECTOR
AUTOGAGE	8910	8920
AUTOMETER	NONE	NONE
FORD MOTORSPORTS	NONE	NONE
MALLORY	NONE	NONE
MOROSO	NONE	NONE
STEWART (voltage triggered)	8910	8920
S.W. & BI TORX	NONE	NONE
SUN	8910	8920
VDO	8910	8920
AMC (JEEP)	8910	8920
CHRYSLER	8910	8920
FORD (voltage triggered)	8910	8920
GENERAL MOTORS	Bypass In-Line Filter	Bypass In-line filter
IMPORTS	8910	8920

Note: On the list above, the trigger wire on tachometers that are marked NONE may be connected to the Tach Output Terminal on the MSD 6 Series Ignition Unit using the supplied Female Faston Receptacle.

NO-RUN ON FOREIGN VEHICLES

Some foreign vehicles with fuel injection systems may require an MSD Tach/Fuel Injection Adapter to run with an MSD 6 Series Ignition. This is because many of these systems use the same trigger source to operate the MSD, the tachometer and the fuel injection. This results in a voltage signal that is too low to accurately trigger the fuel injection. To fix this, an MSD Tach Adapter, PN 8910, will remedy the problem on the majority of vehicles. If the PN 8910 does not fix the problem, the PN 8910-EIS will be required.

Note: Toyotas and Ford Probes will require the PN 8910-EIS Adapter.

INOPERATIVE TACHOMETERS

If your tachometer fails to operate with the MSD installed you may need an MSD Tach Adapter. Before getting an Adapter, try connecting your tachometer trigger wire to the tach output terminal on the side of the MSD. This output produces a 12 volt, square wave (see page 2). If the tach still does not operate, you will need a Tach Adapter. There are two Tach Adapters:

PN 8920: If you are using the Magnetic Pickup connector (Green and Violet wires) to trigger the MSD, you will need the PN 8920.
PN 8910: If your tachometer was triggered from the coil negative terminal (voltage trigger) and you are using the White wire to trigger the MSD you will need the PN 8910.

BALLAST RESISTOR

If you have a current trigger tach (originally coil positive) and use the White wire of the MSD, you can purchase a Chrysler Dual Ballast Resistor (used from 1973 - 1976) and wire it as shown in Figure 5.

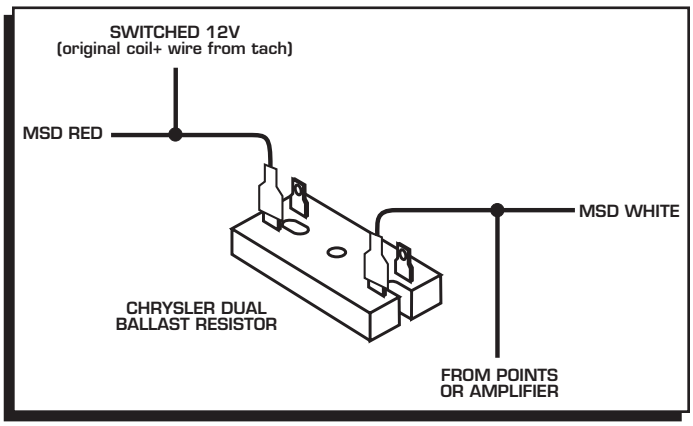

Figure 5 Wiring the Dual Ballast Resistor.

ENGINE RUN-ON

If your engine continues to run even when the ignition is turned Off you are experiencing engine Run-On. This usually only occurs on older vehicles with an external voltage regulator. Because the MSD receives power directly from the battery, it does not require much current to keep the unit energized. If you are experiencing run-on, it is due to a small amount of voltage going through the charging lamp indicator and feeding the small Red wire even if the key is turned off.

Early Ford and GM: To solve the Run-On problem, a Diode is supplied with the MSD in the parts bag. By installing this Diode in-line of the wire that goes to the Charging indicator, the voltage is kept from entering the MSD. Figure 6 shows the proper installation for early Ford and GM vehicles.

Note: Diodes are used to allow voltage to flow only one way. Make sure the Diode is installed facing the proper direction (as shown in Figure 6).

Ford: Install the Diode inline to the wire going to the #1 terminal.
GM: Install the Diode in-line to the wire going to terminal #4.

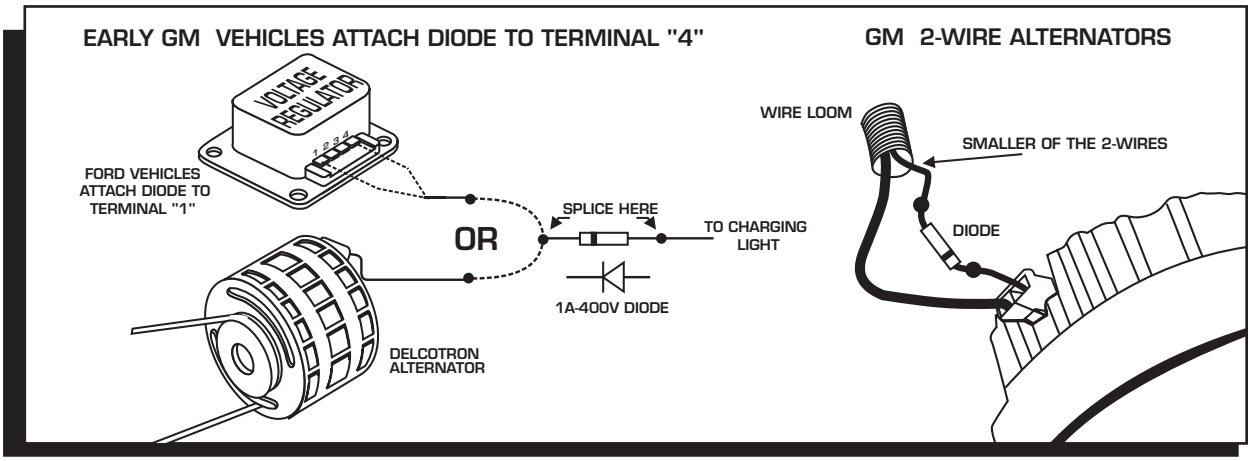

Figure 6 Installing the Diode to fix Run-On.

GM 1973 - 1983 with Delcotron Alternators

GM Delcotron Alternators use an internal voltage regulator. Install the Diode in-line on the smallest wire exiting the alternator (Figure 6). It is usually a Brown wire.

Most other applications: On other applications where engine Run-On is experienced, a Resistor can be put in-line to the MSD's small Red wire (Figure 7). This resistor will keep voltage from leaking through to the MSD unit.

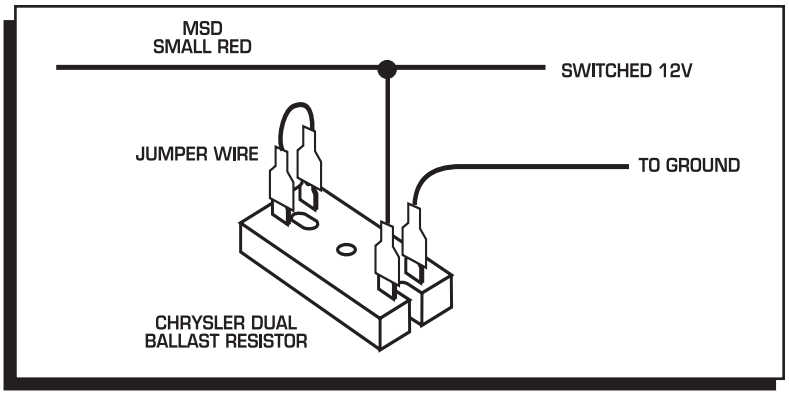

Figure 7 Wiring the Dual Ballast Resistor for Run-On.

MISSES AND INTERMITTENT PROBLEMS

Experience at the races has shown that if your engine is experiencing a miss or hesitation at higher rpm, it is usually not directly ignition. Most probable causes include a coil or plug wire failure, arcing from the cap or boot plug to ground or spark ionization inside the cap. Several items to inspect are:

- Always inspect the plug wires at the cap and at the plug for a tight connection and visually inspect for cuts, abrasions or burns.
- Inspect the Primary Coil Wire connections. Because the MSD is a Capacitive Discharge ignition and it receives a direct 12 volt source from the battery, there will not be any voltage at the Coil Positive (+) terminal even with the key turned On. During cranking or while the engine is running, very high voltage will be present and no test equipment should be connected.

WARNING: Do not touch the coil terminals during cranking or while the engine is running.

- Make sure that the battery is fully charged and the connections are clean and tight. If you are not running an alternator this is an imperative check. If the battery voltage falls below 10 volts during a race, the MSD output voltage will drop.
- Is the engine running lean? Inspect the spark plugs and complete fuel system.
- Inspect all wiring connections for corrosion or damage. Remember to always use proper connections followed by soldering and seal the connections completely.

If everything checks positive, use the following procedure to test the ignition for spark. MSD also offers an Ignition Tester, PN 8998. This tool allows you to check your complete ignition system while it is in the car as well as the operation of rpm limits, activated switches and shift lights.

CHECKING FOR SPARK

If triggering the ignition with the White wire:

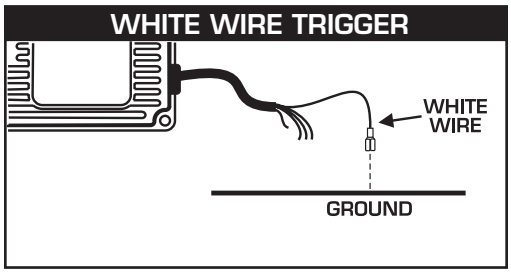

Figure 8 Checking for Spark with the White Wire.

1. Make sure the ignition switch is in the "Off" position.
2. Remove the coil wire from the distributor cap and set the terminal approximately 1/2" from ground.
3. Disconnect the MSD White wire from the distributor's points or ignition amplifier.
4. Turn the ignition to the On position. Do not crank the engine.
5. Tap the White wire to ground several times. Each time you pull the wire from ground, a spark should jump from the coil wire to ground. If spark is present, the ignition is working properly. If there is no spark skip to step 6 on page 10:

If triggering with the Magnetic Pickup:

1. Make sure the ignition switch is in the "Off" position.
2. Remove the coil wire from the distributor cap and set the terminal approximately 1/2" from ground.
3. Disconnect the MSD magnetic pickup wires from the distributor.
4. Turn the ignition to the On position. Do not crank the engine.
5. With a small jumper wire, short the MSD's Green and Violet magnetic pickup wires together several times. Each time you break this short, a spark should jump from the coil wire to ground. If spark is present, the ignition is working properly. If there is no spark skip to step 6 below:

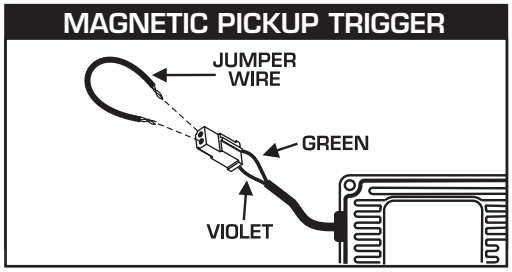

Figure 9 Checking for Spark with Magnetic Pickup.

6. **If there is no spark:**
   A. Inspect all of the wiring.
   B. Substitute another coil and repeat the test. If there is now spark, the coil is at fault.
   C. If there is still no spark, check to make sure there is 12 volts on the small Red wire from the MSD when the key is in the On position. If 12 volts is not present, find another switched 12 volt source and repeat the test.
   D. If, after following the test procedures and inspecting all of the wiring, there is still no spark, the MSD Ignition is in need of repair. See the Warranty and Service section for information.

The following wiring diagrams illustrate numerous installations on different vehicles and applications. If you experience difficulties when installing your MSD, contact our Customer Support Department at (915) 855-7123 (7 - 6 Mountain time) or e-mail us at:

msdtech@msdignition.com

MSD SYSTEMS Installing to Points/Amplifier Style Ignition.

NOTE: On dual point setups, it is recommended to remove the trailing set of points.

NOTE: Ballast Resistor is not necessary.

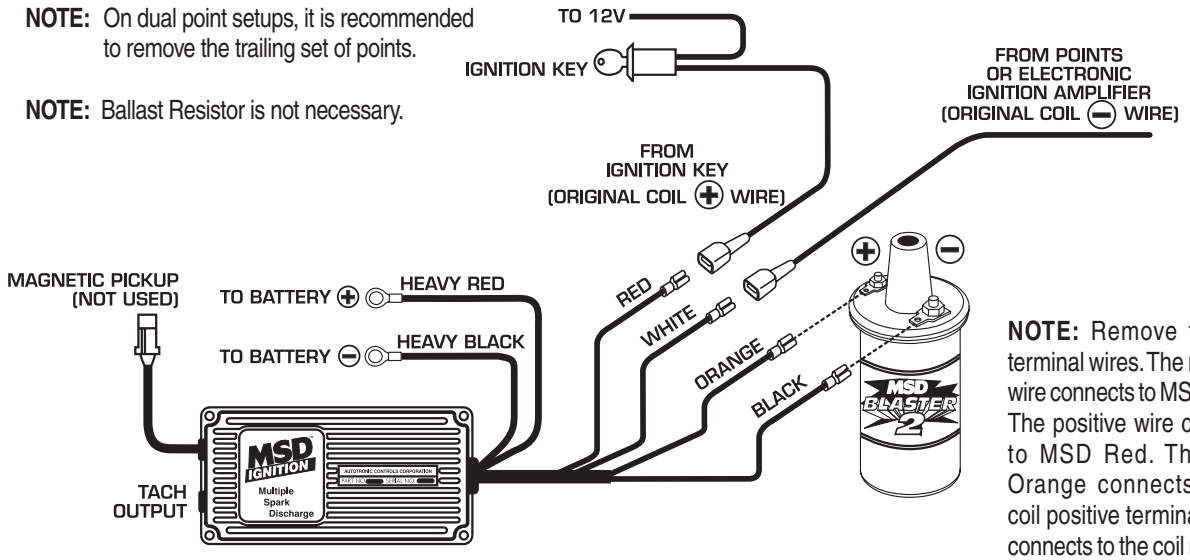

NOTE: Remove the coil terminal wires. The negative wire connects to MSD White. The positive wire connects to MSD Red. The MSD Orange connects to the coil positive terminal, Black connects to the coil negative terminal.

MSD SYSTEMS Installing to an MSD Distributor/Crank Trigger.

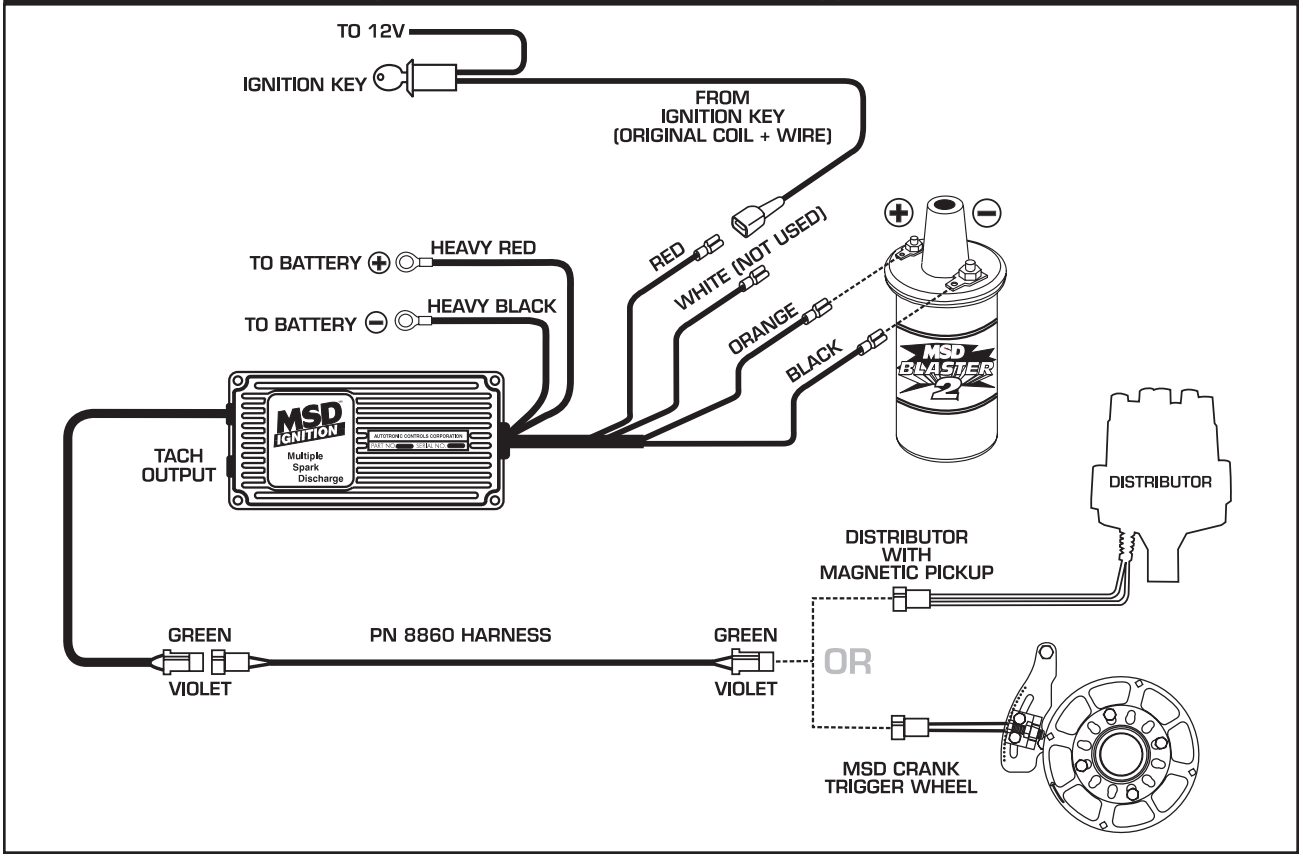

MSD SYSTEMS Installing to an MSD Distributor PN 8360.

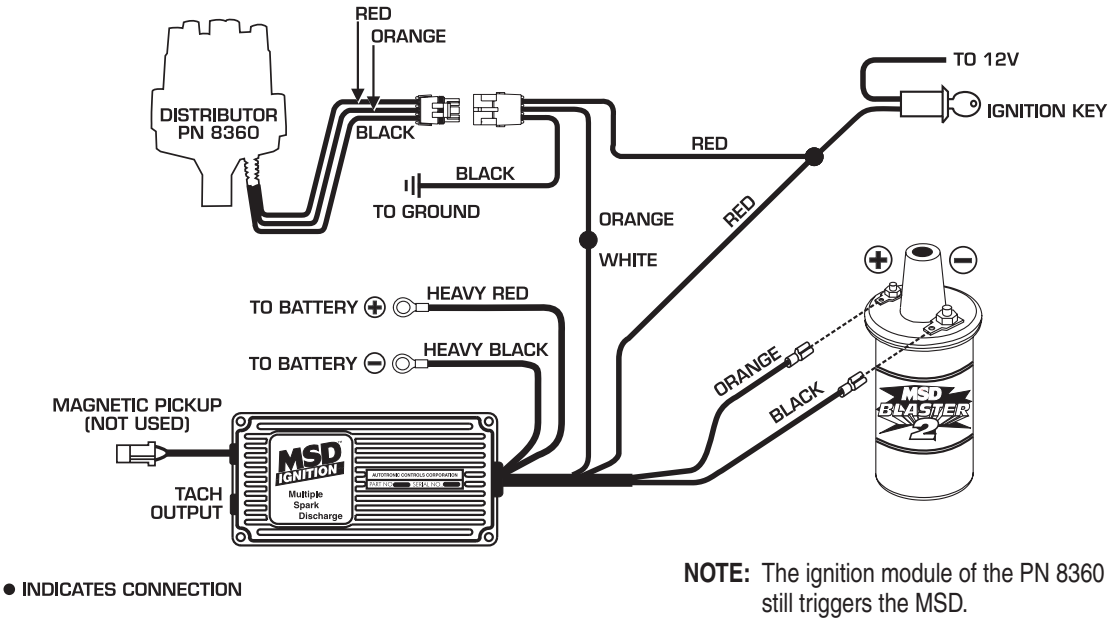

NOTE: The ignition module of the PN 8360 still triggers the MSD.

MSD SYSTEMS With an MSD Timing Control (points or amplifier).

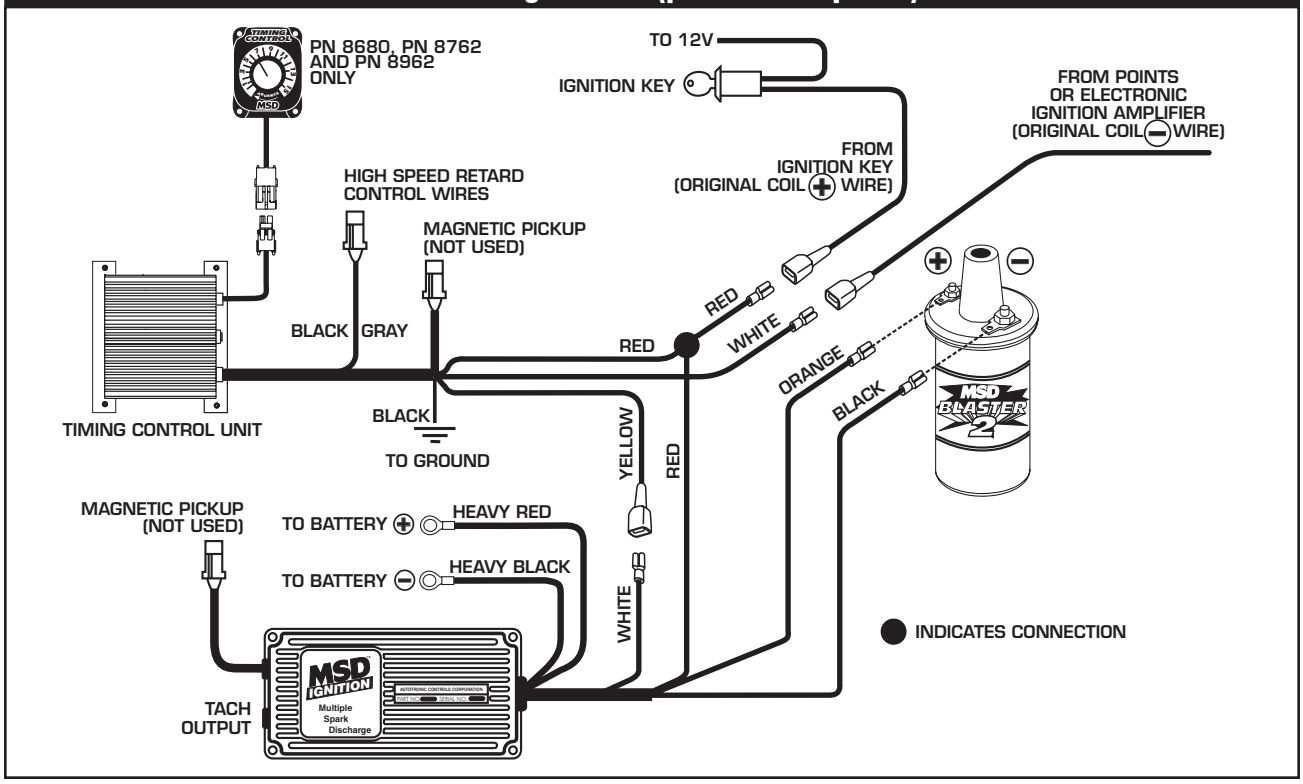

MSD SYSTEMS Typical Drag Race Setup with Timing Control and Two Step Selector.

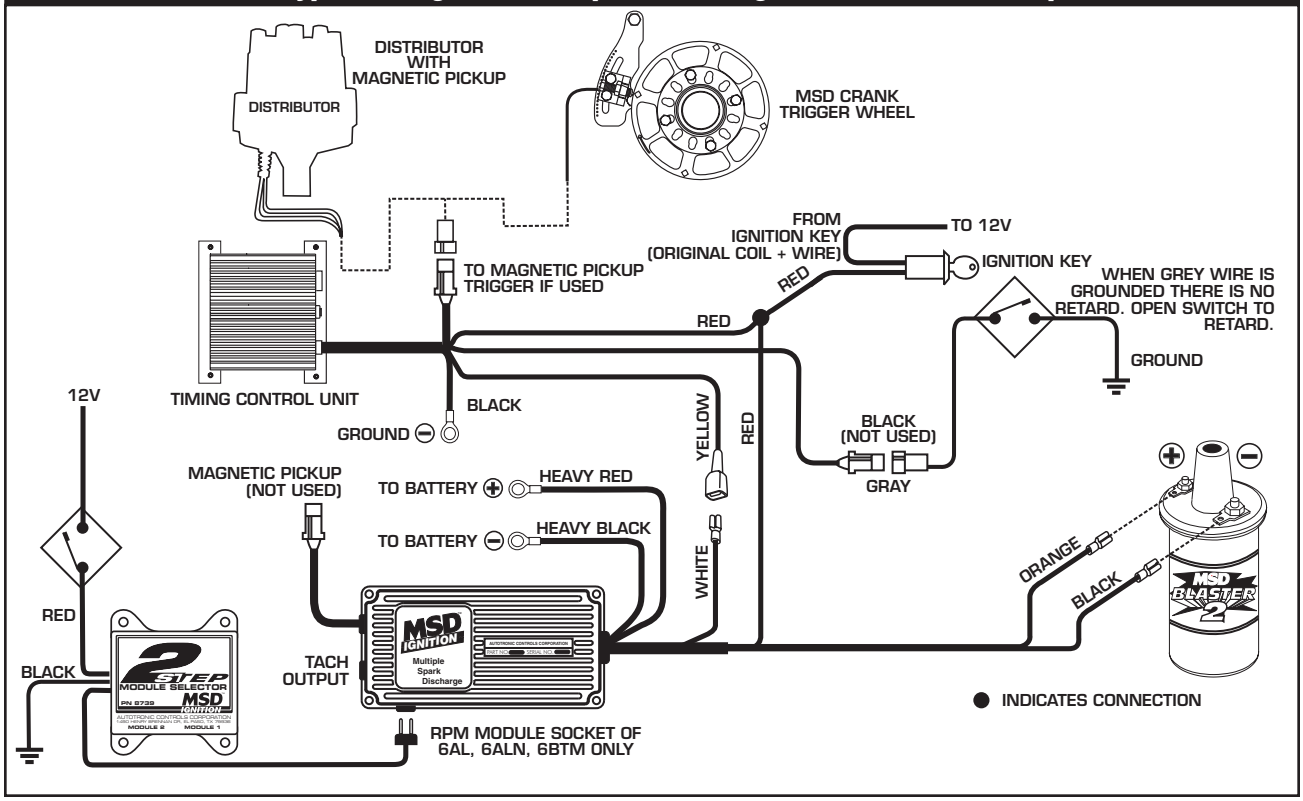

MSD SYSTEMS Wiring Dual MSD's with PN 8301 Switch.

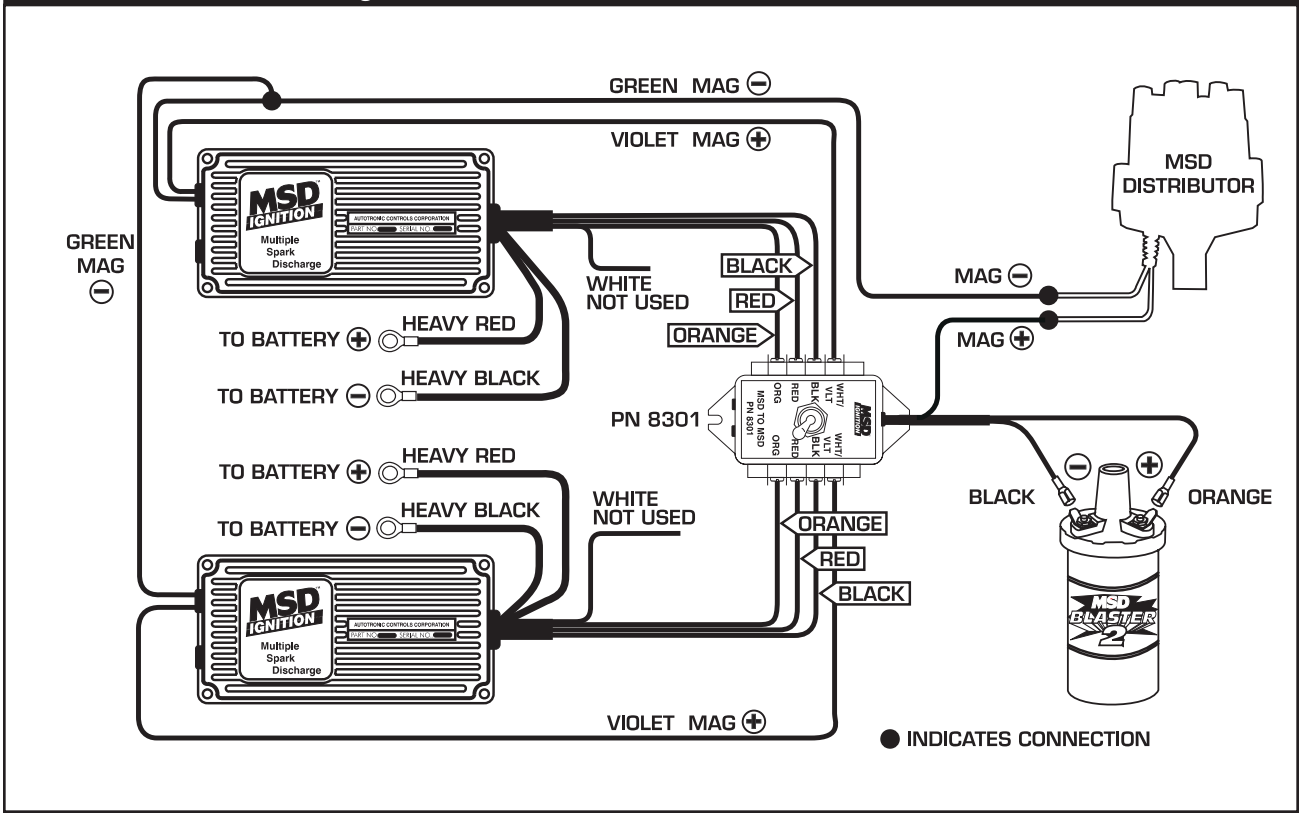

MSD SYSTEMS Wiring a Complete Dual MSD Ignition Setup.

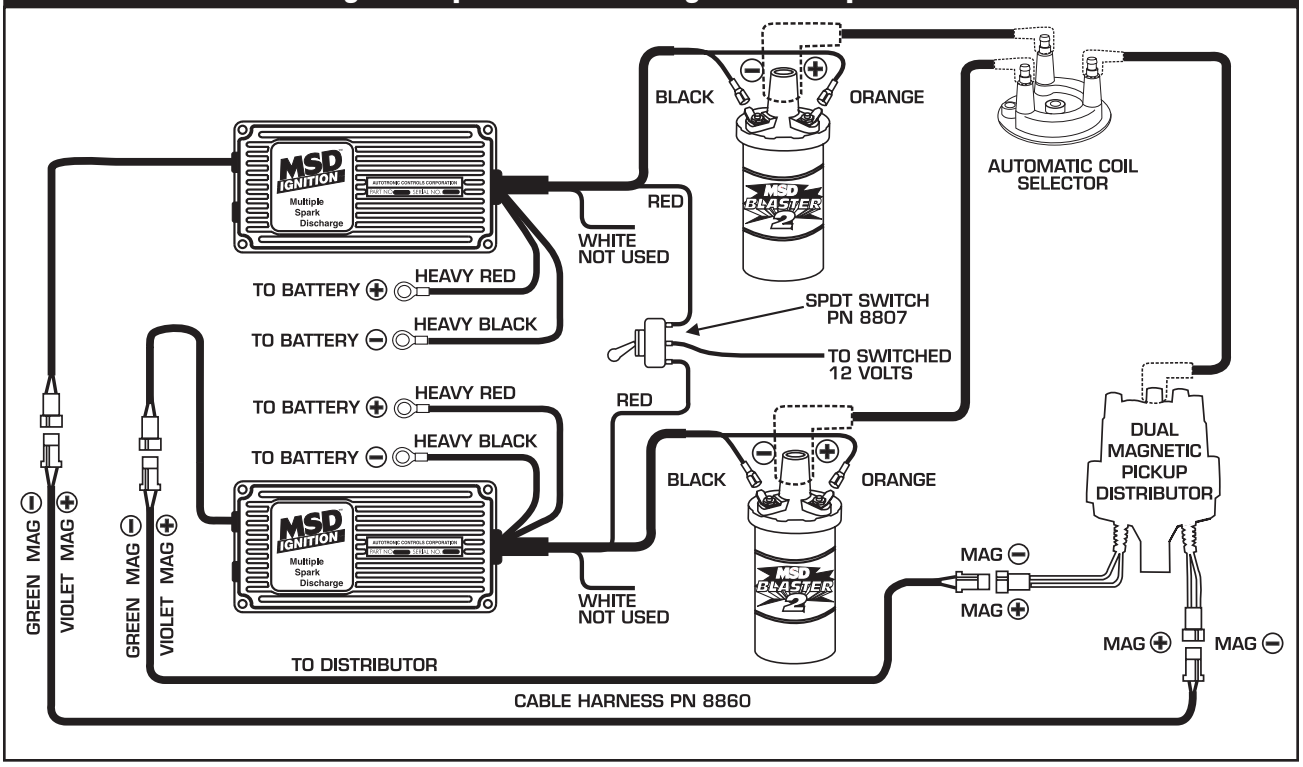

GM IGNITIONS Wiring a Dual Connector Coil.

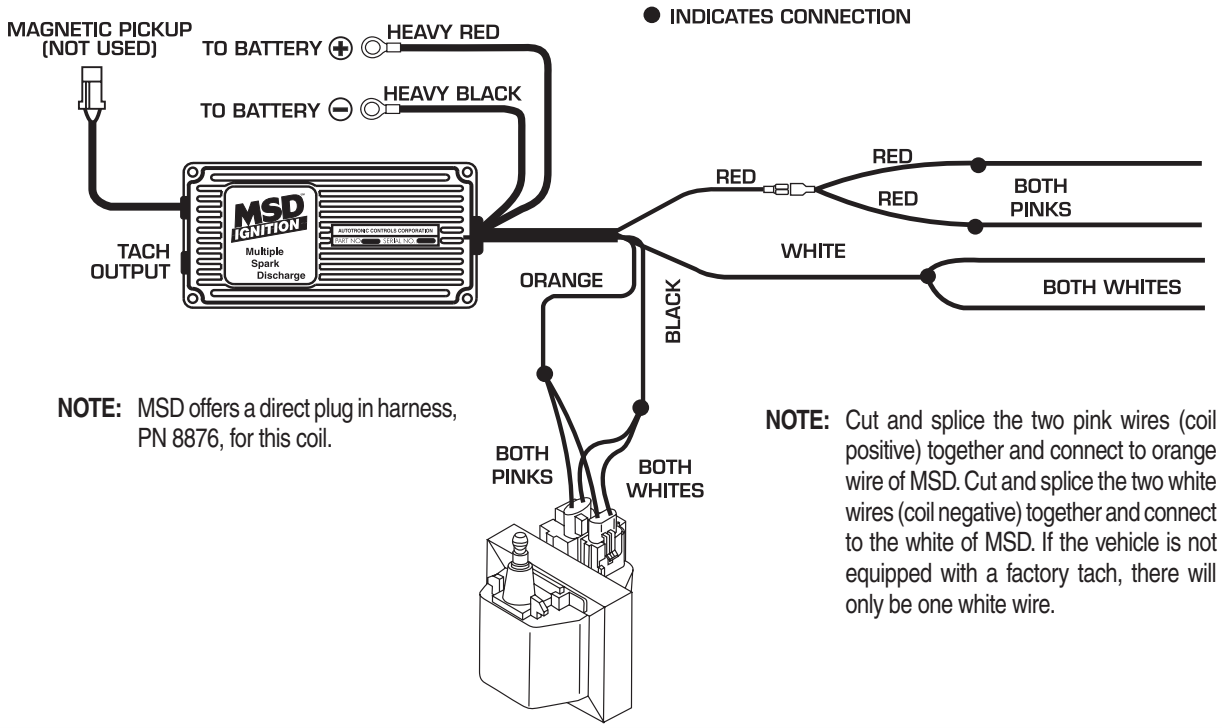

NOTE: MSD offers a direct plug in harness, PN 8876, for this coil.

NOTE: Cut and splice the two pink wires (coil positive) together and connect to orange wire of MSD. Cut and splice the two white wires (coil negative) together and connect to the white of MSD. If the vehicle is not equipped with a factory tach, there will only be one white wire.

GM IGNITIONS Wiring the 1996 and up single connector coil without harness.

NOTE: MSD offers a direct plug in harness that makes this a splice free installation.
Harness PN 8877 - 1996-on GM Vehicles.

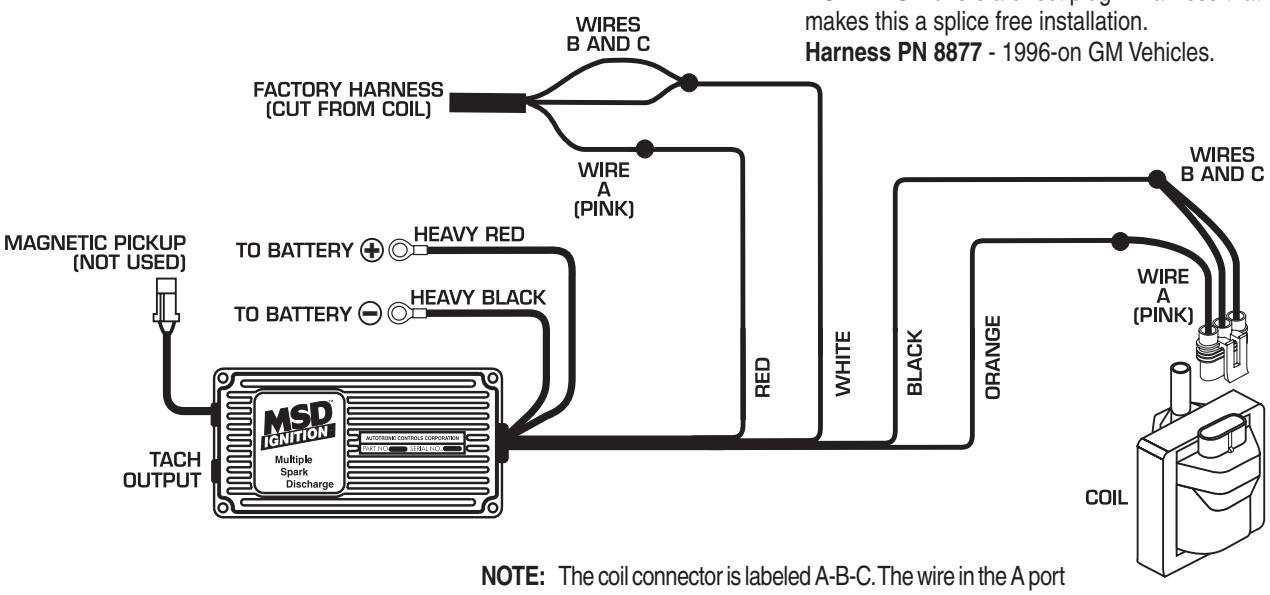

NOTE: The coil connector is labeled A-B-C. The wire in the A port is positive (pink). The wires in B and C are coil negative wires, color will vary by application.

GM IGNITIONS Wiring with an MSD Wiring Harness.

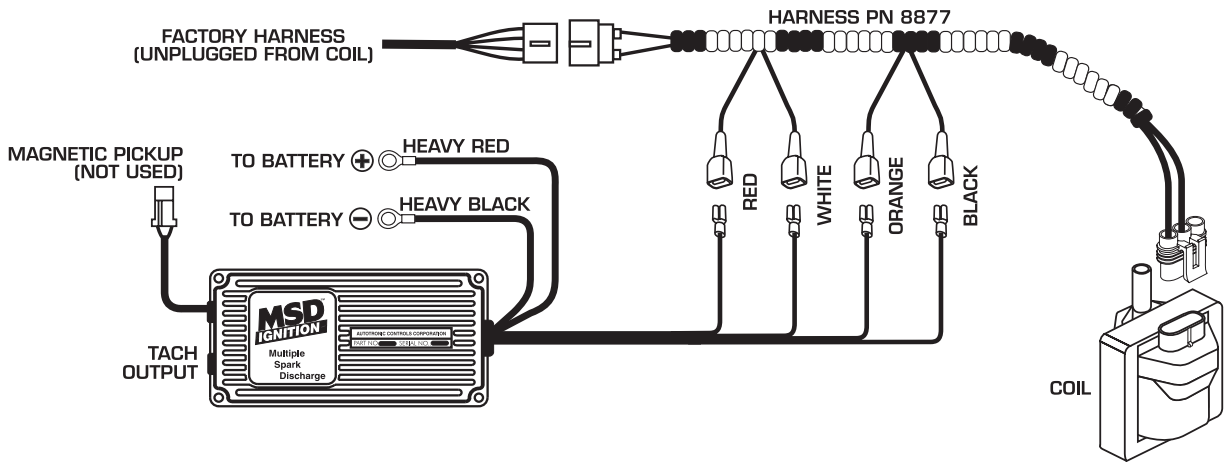

GM IGNITIONS Wiring with an MSD Wiring Harness and a Timing Control.

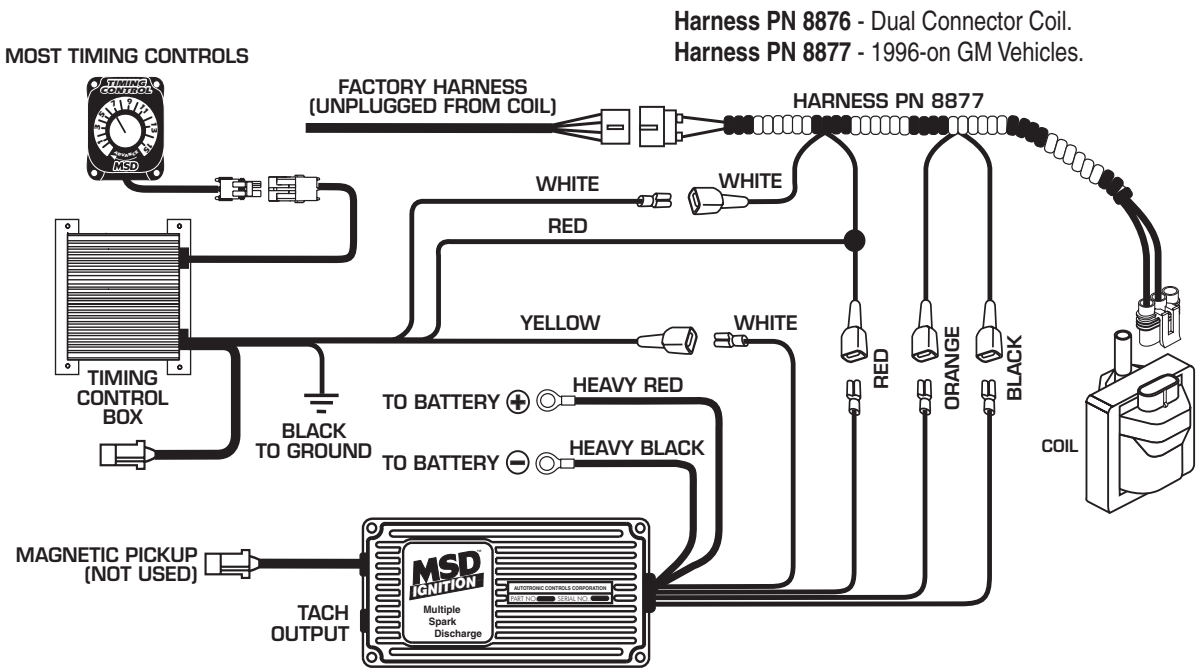

GM IGNITIONS GM Large Cap HEI Distributors

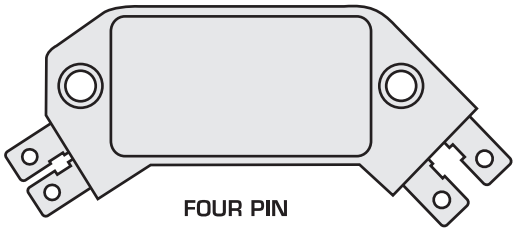

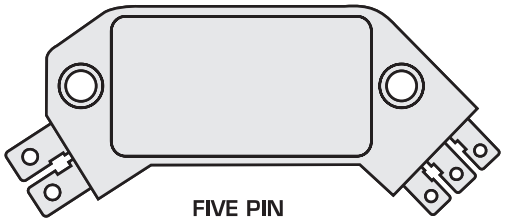

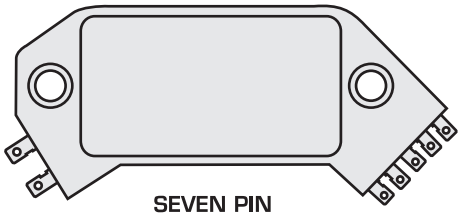

There are three different large cap HEI distributors. To indentify which of the following diagrams fit your specific application, remove the distributor cap and rotor and locate the ignition module at the base of the distributor. Count the number of terminals on both ends of the module and follow the corresponding diagram. GM used 4, 5, and 7-pin modules in these distributors.

NOTE: Some 5-pin models may experience a hesitation or stall on deceleration. If this occurs, contact MSD Tech Line for the required bolt-in diode to correct the problem. MSD Tech Line (915) 855-7123.

GM IGNITIONS Wiring an HEI 4-pin Module (Magnetic Pickup Trigger).

NOTE: The GM Ignition Module is removed and replaced with the MSD PN 8861 Wire Harness.

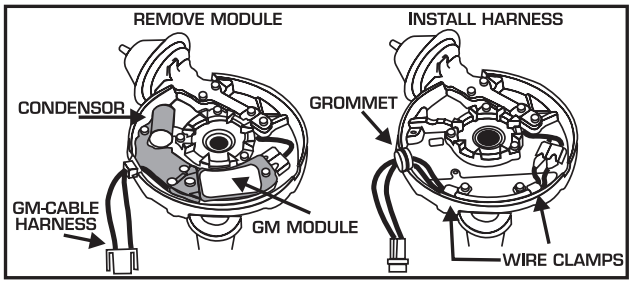

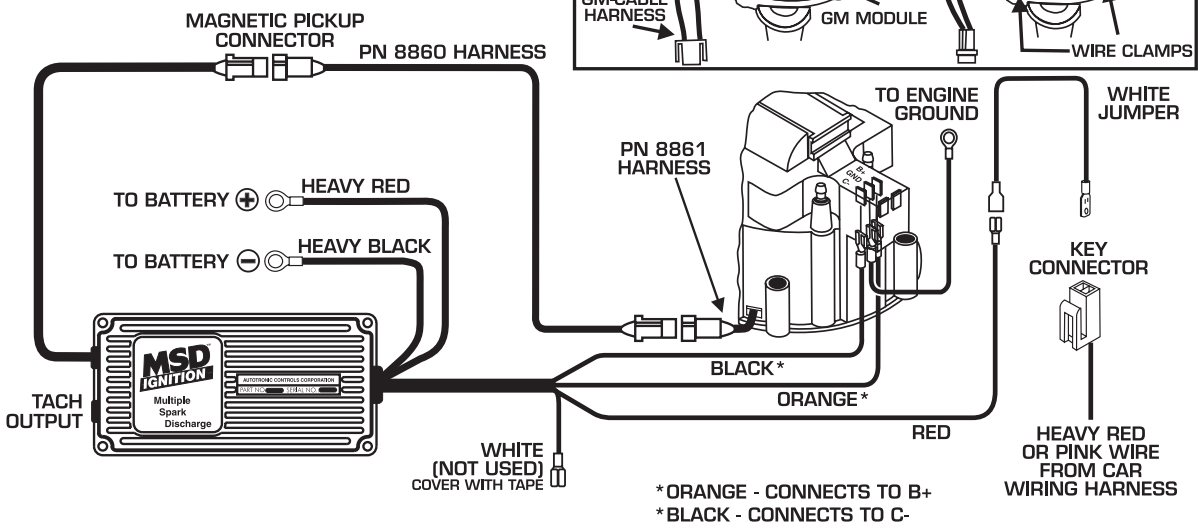

GM IGNITIONS Wiring an HEI 5 or 7-pin Module (Amplifier Trigger).

NOTE: Some 5-pin models may experience a hesitation or stall on deceleration. If this occurs, contact MSD Tech Line for the required bolt-in diode to correct the problem. MSD Tech Line (915) 855-7123.

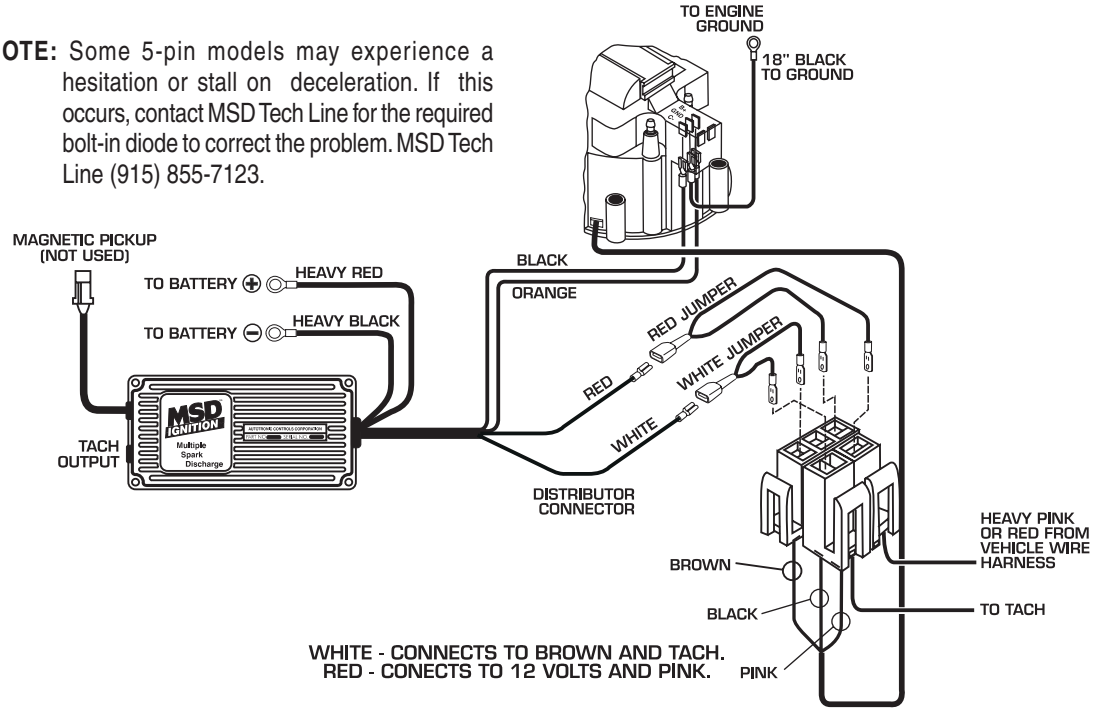

FORD IGNITIONS Wiring a Ford DuraSpark using White Wire Trigger.

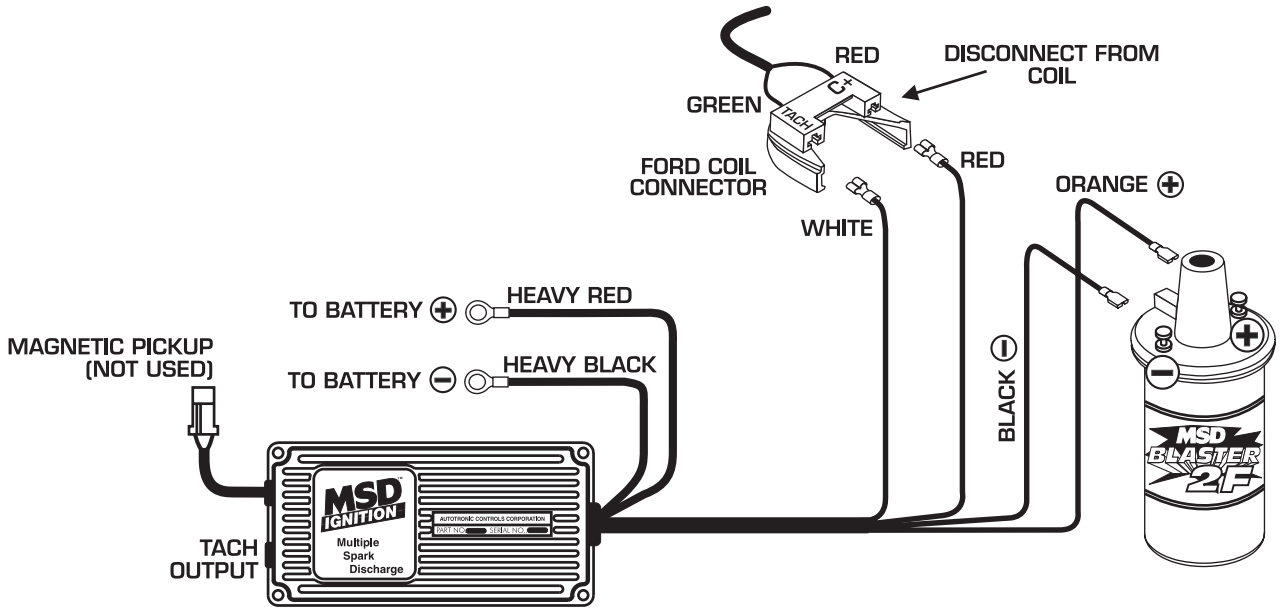

FORD IGNITIONS Wiring a Ford DuraSpark using Magnetic Pickup Trigger.

NOTE: MSD Offers a harness, PN 8869 to connect the magnetic pickup connector to the Ford Duraspark connector.

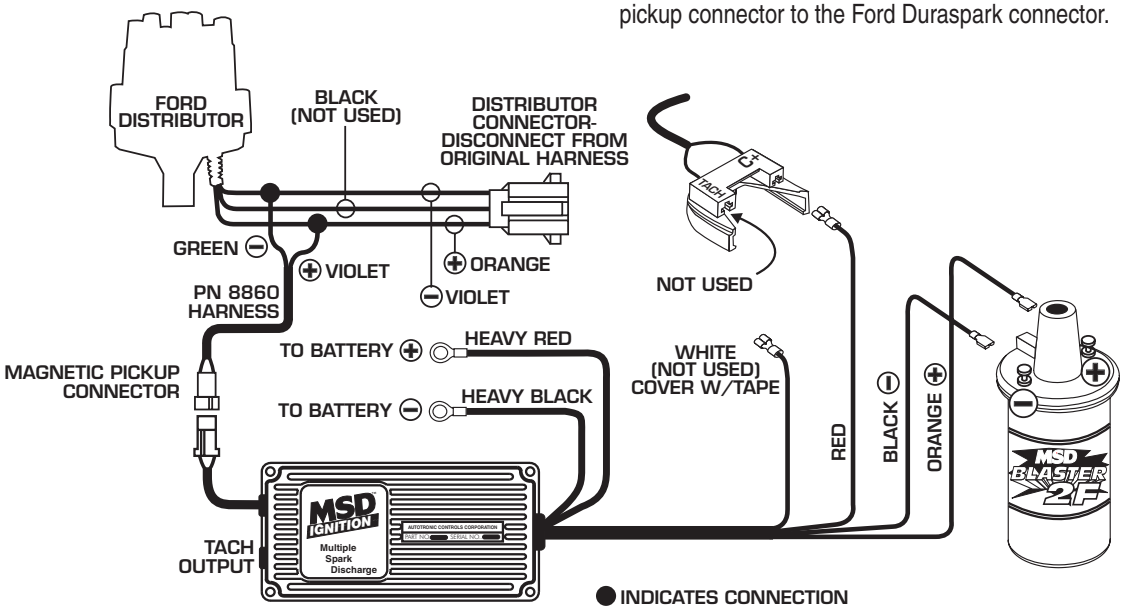

FORD IGNITIONS Wiring a Ford TFI (without Harness).

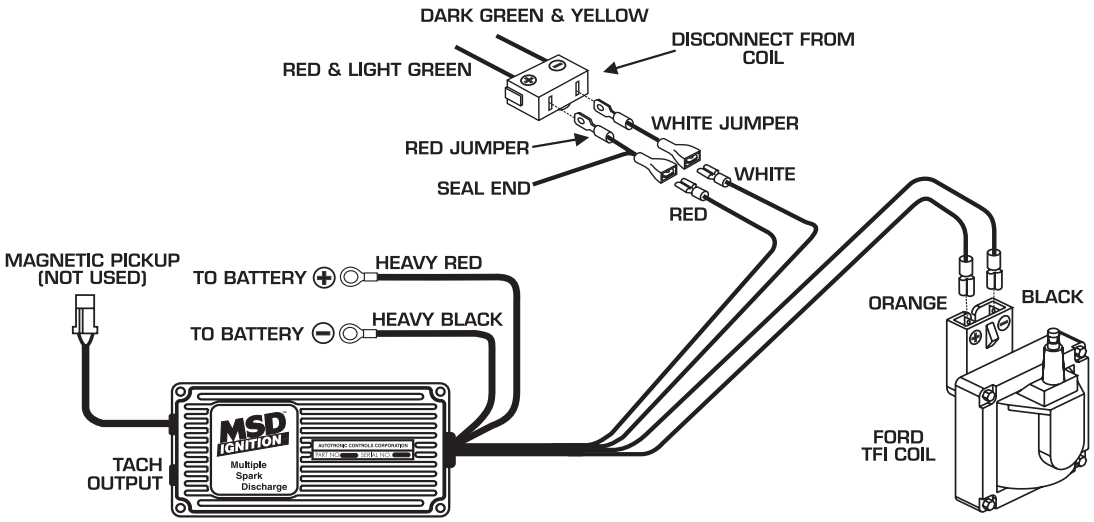

FORD IGNITIONS Wiring a Ford TFI with Harness, PN 8874.

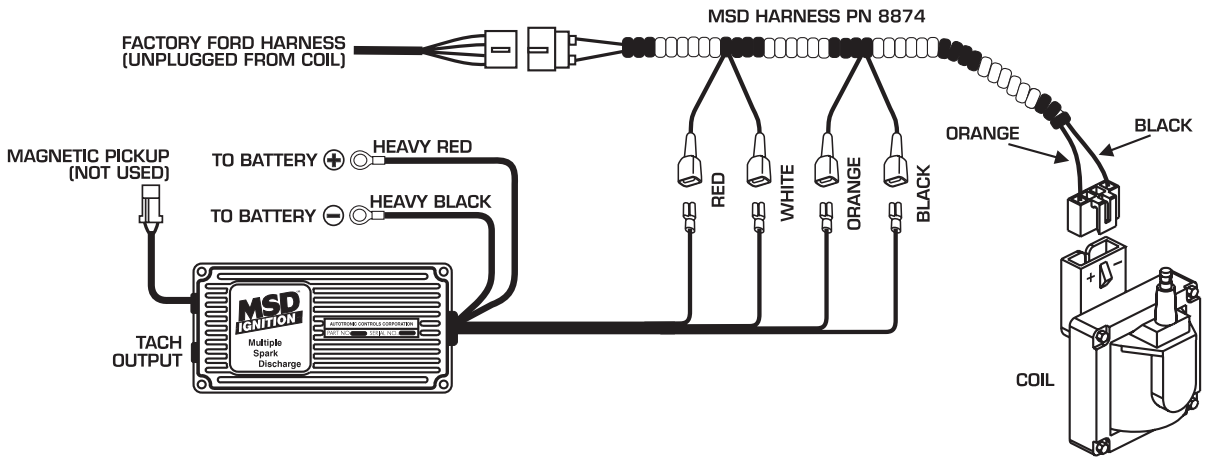

NOTE: Installation of a Timing Control with the Harness, see page 15.

CHRYSLER IGNITIONS Wiring a Chrysler Electronic Ignition using Magnetic Pickup Trigger.

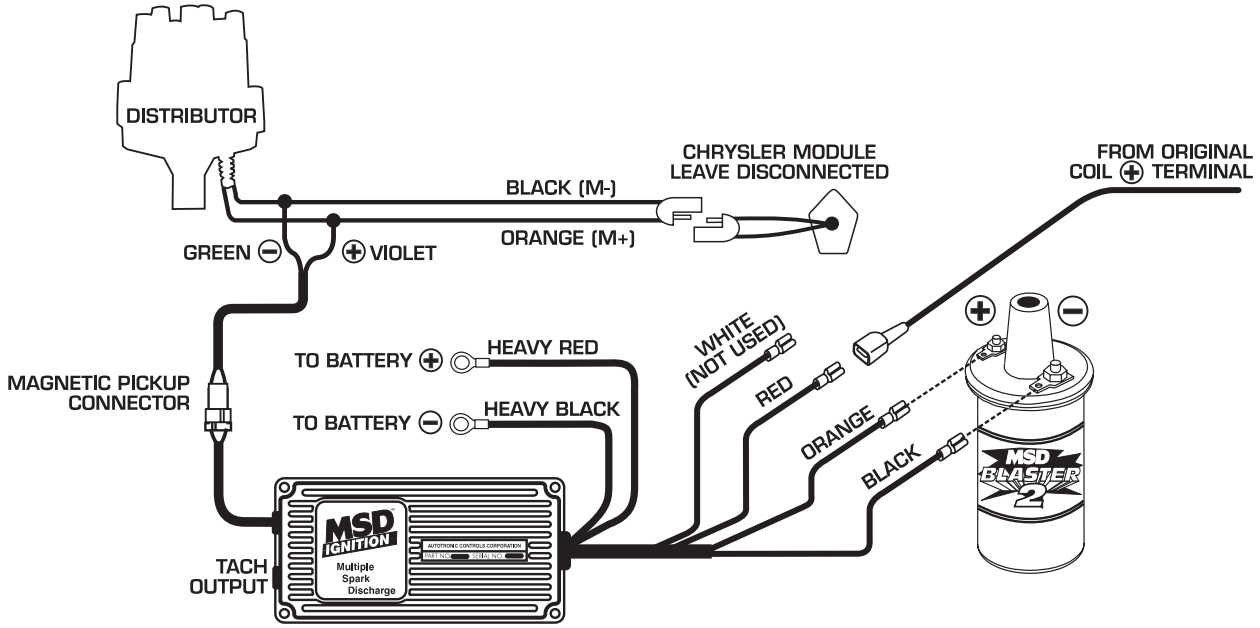

CHRYSLER IGNITIONS Wiring a Late Model Dodge with 2-pin connector.

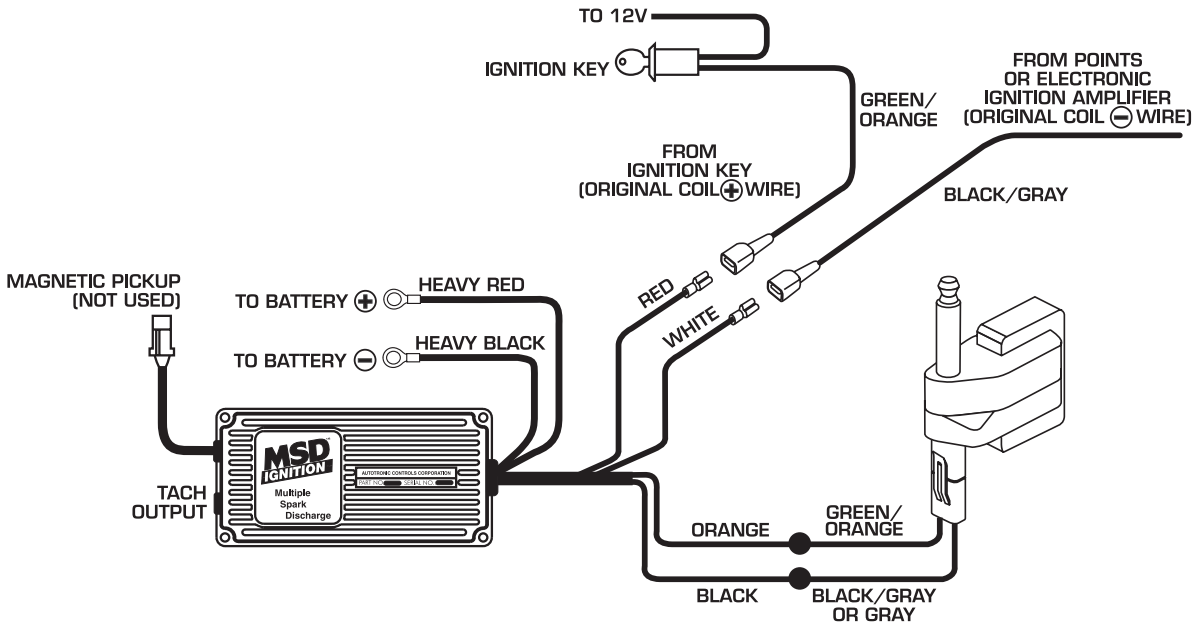

NOTE: Original coil wiring will be cut.

CHRYSLER IGNITIONS Wiring a Jeep with Integrated Coil/Module Assembly.

MSD offers a Wiring Kit, PN 8813, that allows you to modify the original Jeep Ignition Module/Coil assembly. This style of ignition is used in many 1987-1989 models. The drawing shows the installation with the coil already modified.

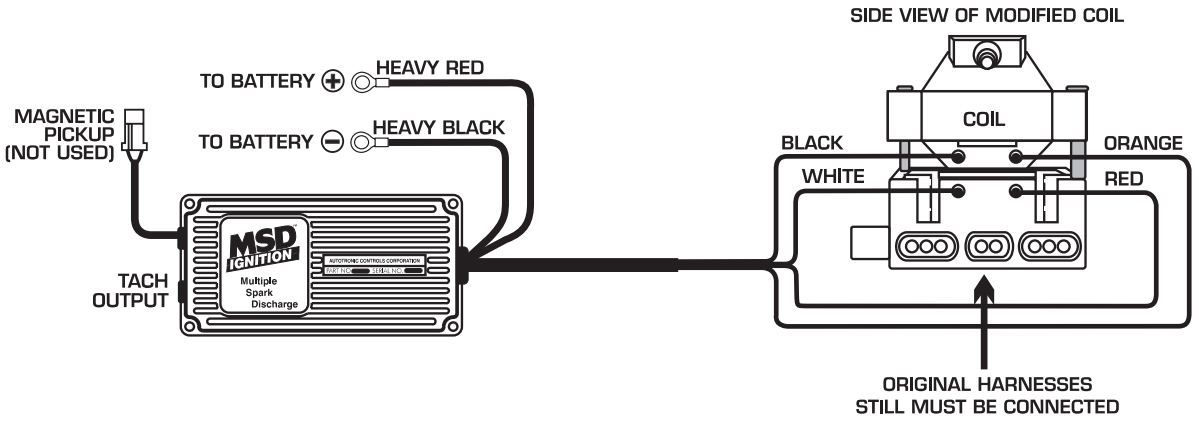

HONDA IGNITIONS Wiring a Honda with Internal Coil.

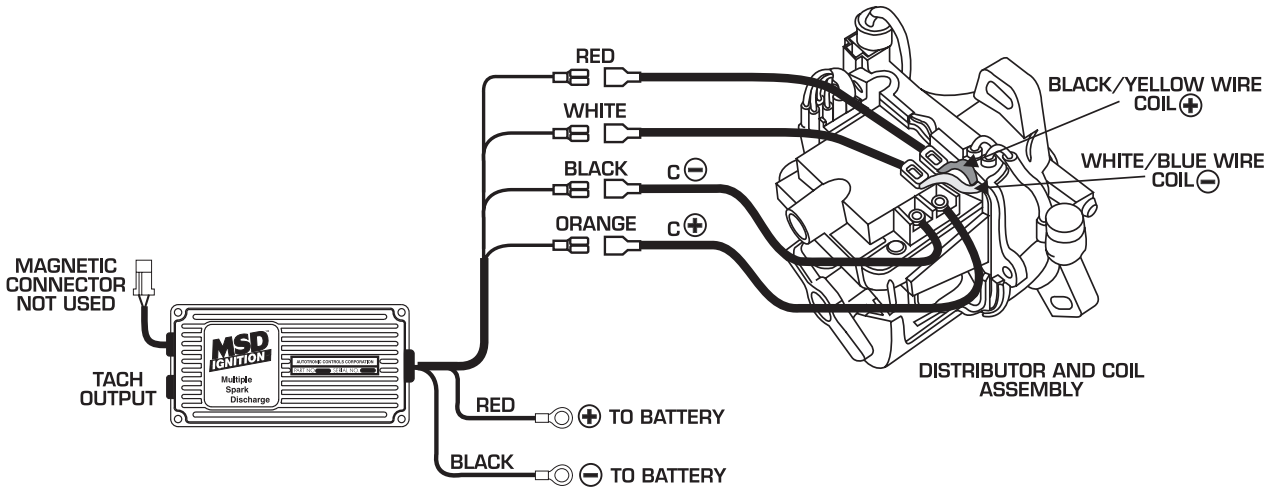

HONDA IGNITIONS Wiring a Honda with a Blaster Coil and Power Cap.

MSD offers a Power Cap to convert your internal coil Honda to external coil for most popular models.

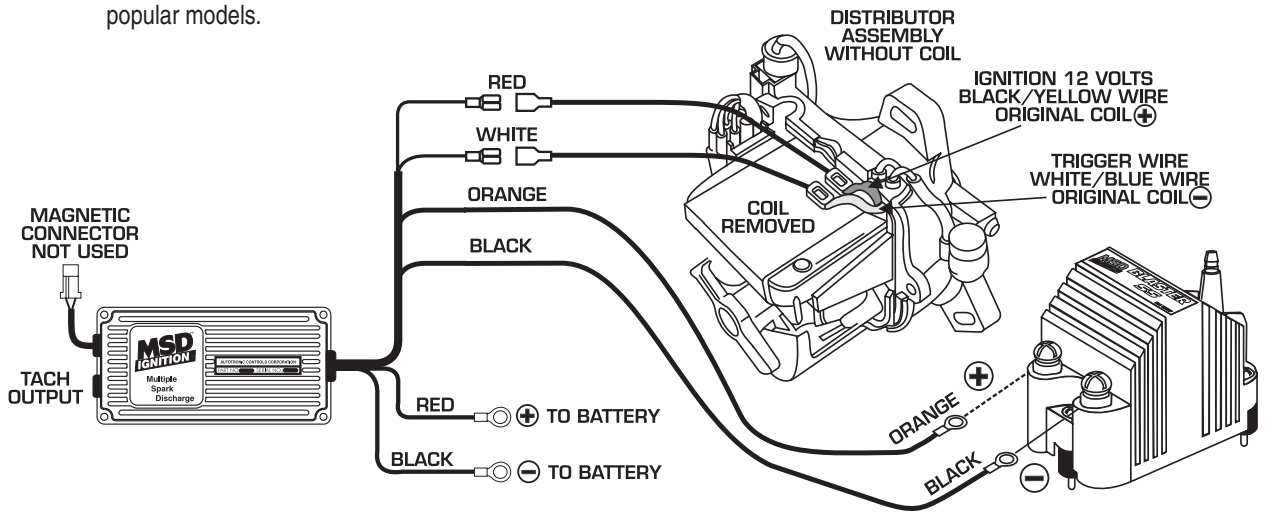

HONDA IGNITIONS Wiring a Factory External Coil Honda/Acura .

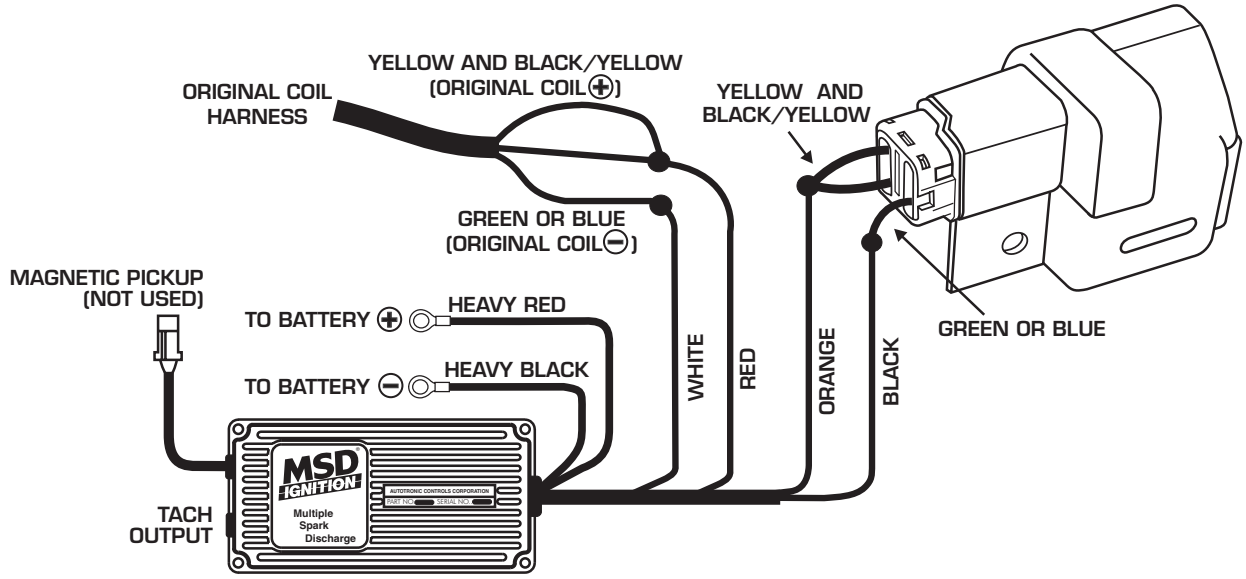

GENERAL IMPORT WIRING

NOTE: Remove the coil terminal wires. The negative wire connects to MSD White. The positive wire connects to MSD Red. The MSD Orange connects to the coil positive terminal, Black connects to the coil negative terminal.

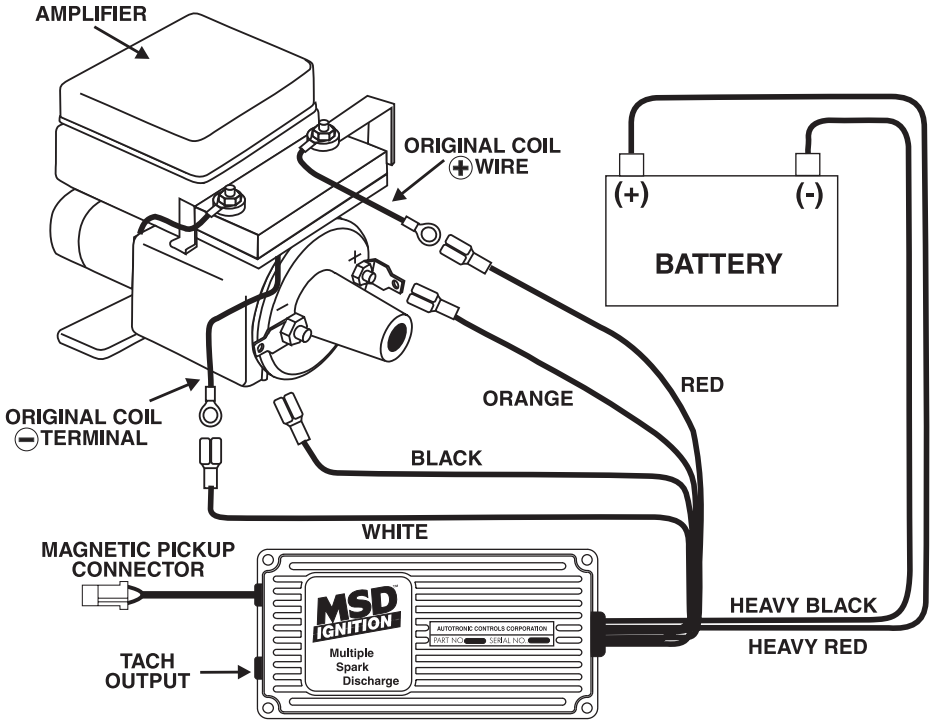

AFTERMARKET COMPONENTS Wiring a Mallory 9000 Series using Magnetic Pickup.

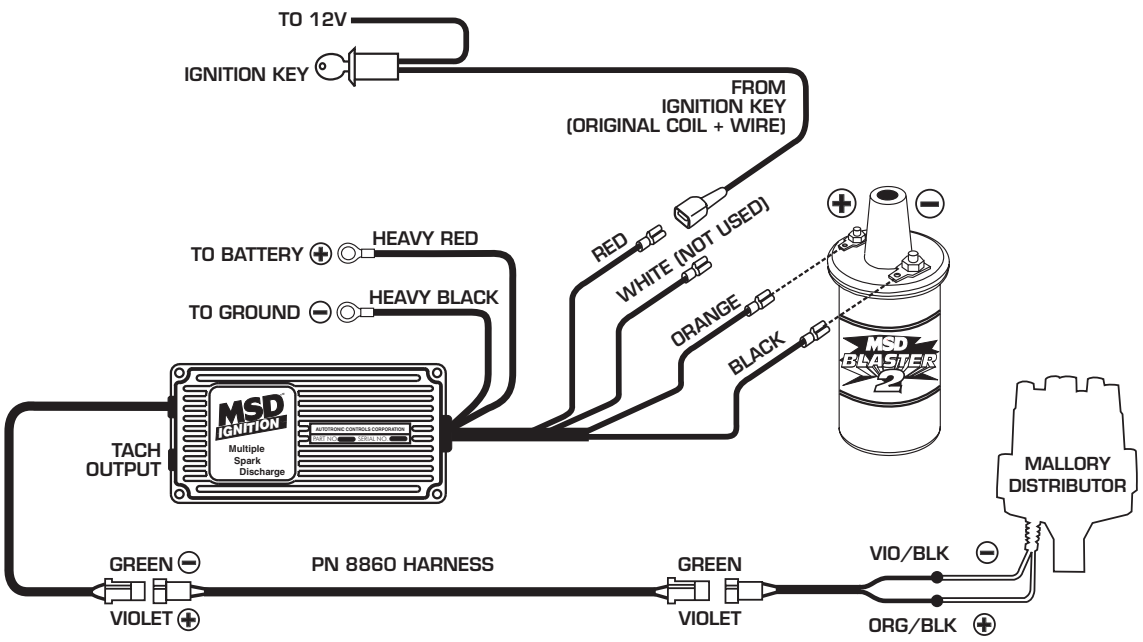

AFTERMARKET COMPONENTS Wiring a Mallory Unilite or 9000 Series using Points Trigger.

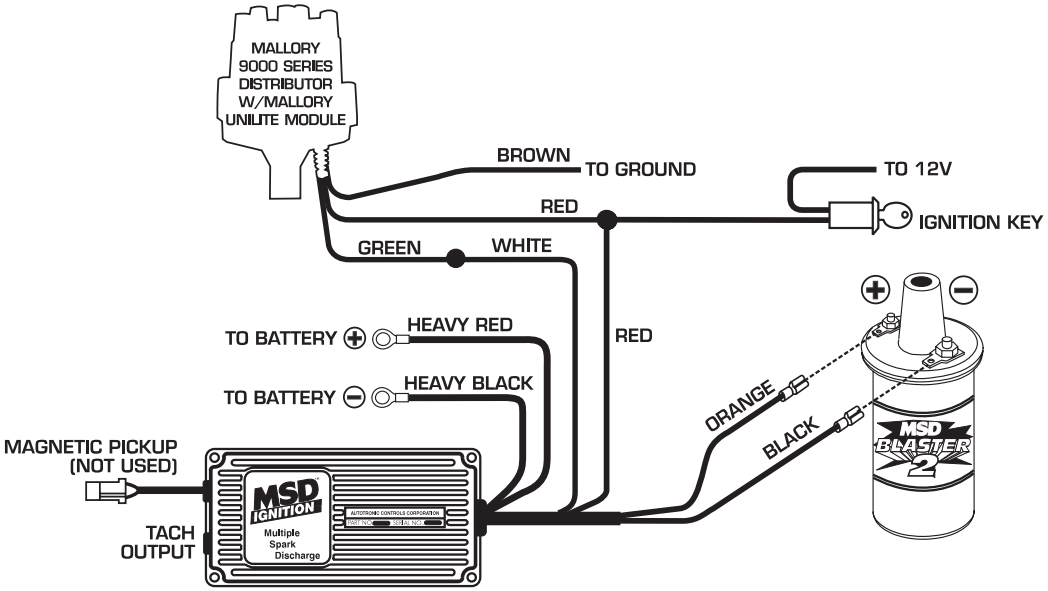

MSD INSTALLATION INSTRUCTIONS

AFTERMARKET COMPONENTS Wiring to a Pertronix Ignitor Kit

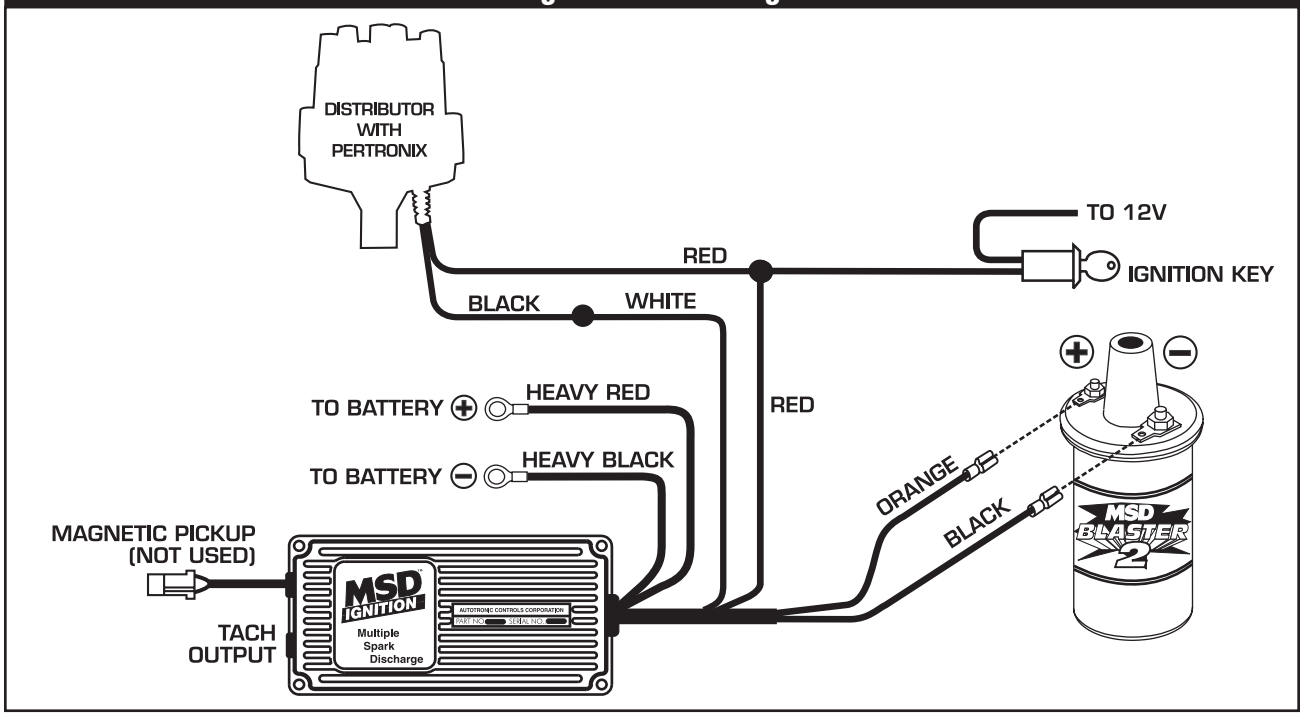

If you did not find a schematic to match your application, or if you need assistance, please contact MSD Tech at (915) 855-7123.

Service

In case of malfunction, this MSD component will be repaired free of charge according to the terms of the warranty. When returning MSD components for warranty service, **Proof of Purchase** must be supplied for verification. After the warranty period has expired, repair service is based on a minimum and maximum fee.

All returns must have a Return Material Authorization (RMA) number issued to them before being returned. To obtain an RMA number please contact MSD Customer Service at 1 (888) MSD-7859 or visit our website at www.msdperformance.com/rma to automatically obtain a number and shipping information.

When returning the unit for repair, leave all wires at the length in which you have them installed. Be sure to include a detailed account of any problems experienced, and what components and accessories are installed on the vehicle. The repaired unit will be returned as soon as possible using Ground shipping methods (ground shipping is covered by warranty). For more information, call MSD at (915) 855-7123. MSD technicians are available from 7:00 a.m. to 5:00 p.m. Monday - Friday (mountain time).

Limited Warranty

MSD warrants this product to be free from defects in material and workmanship under its intended normal use*, when properly installed and purchased from an authorized MSD dealer, for a period of one year from the date of the original purchase. This warranty is void for any products purchased through auction websites. If found to be defective as mentioned above, it will be repaired or replaced at the option of MSD. Any item that is covered under this warranty will be returned free of charge using Ground shipping methods.

This shall constitute the sole remedy of the purchaser and the sole liability of MSD. To the extent permitted by law, the foregoing is exclusive and in lieu of all other warranties or representation whether expressed or implied, including any implied warranty of merchantability or fitness. In no event shall MSD or its suppliers be liable for special or consequential damages.

*Intended normal use means that this item is being used as was originally intended and for the original application as sold by MSD. Any modifications to this item or if it is used on an application other than what MSD markets the product, the warranty will be void. It is the sole responsibility of the customer to determine that this item will work for the application they are intending. MSD will accept no liability for custom applications.

© 2014 MSD LLC
FRM32520 Revised 06/14 Printed in U.S.A.

MSD COIL COMPATIBILITY LIST

This chart lists the compatibility of various coils with MSD Ignition Controls. It is impossible to list every coil combination and it is recommended to check with the coil manufacturer before installation.

★ - Indicates preferred coils for model indicated.
YES - Coil is compatible with the model indicated.
NO - Coil is NOT compatible. Do not use.

	MSD 5/ BLASTER	MSD 6- SERIES	7AL-2, 7AL-3 SERIES	DIGITAL-7 SERIES
MSD Blaster 2 Coil PN 8200 Chrome	★	★	YES	YES
MSD Pro Power Coil PN 8201 (Drag Race Only)	NO	NO	★	NO
MSD Blaster 2 Coil PN 8202 Red	★	★	YES	YES
MSD Blaster 2 Coil PN 8203 w/hardware Red	★	★	YES	YES
MSD Blaster 2F Coil PN 8205 (Ford style)	★	★	YES	YES
MSD Blaster High Vibration Coil PN 8222	★	★	YES	YES
MSD Blaster 3 Coil PN 8223	★	★	YES	YES
MSD HEI Coil PN 8225	NO	YES	YES	YES
MSD Blaster Ford TFI Coil PN 8227	YES	YES	YES	YES
MSD Blaster GM Dual Connector Coil PN 8226	YES	YES	YES	YES
MSD Blaster SS Coil PN 8207	YES	YES	YES	YES
MSD 6 HVC Coil PN 8250 (Use only with 6 HVC Series Ignitions)	NO	NO	NO	NO
MSD Blaster HVC Coil PN 8252	YES	YES	YES	YES
MSD Blaster HVC II Coil PN 8253	YES	★	YES	YES
MSD Pro Power HVC Coil PN 8251	NO	NO	★	★
MSD Pro Power HVC II Coil PN 8261	NO	NO	★	★
MSD 10 Plus Coil PN 8208 (Use only with MSD 10-Plus PN7502)	NO	NO	NO	NO
Accel BEI 140004 (Race use only)	NO	NO	YES	NO
Accel HEI Super Coils 140003, 140005	NO	YES	YES	NO
Accel BEI 140004 (Racing use only)	NO	NO	YES	NO
Accel Super Coil 140008, 140001	YES	YES	NO	NO
Accel 140108	YES	YES	YES	NO
Accel 140205	YES	YES	YES	NO
Accel 140207	YES	YES	YES	NO
Accel 140305	YES	YES	YES	NO
Accel 140306	NO	NO	NO	NO
Accel 7750	YES	YES	YES	NO
Accel 7751	YES	YES	YES	NO
Accel 7752	YES	YES	YES	NO
Accel 7753	YES	YES	YES	NO
Accel 8140, 8140C	YES	YES	YES	NO
Allison PS-10	NO	NO	NO	NO
Allison PS-15	NO	NO	NO	NO
Allison PS-20	YES	YES	YES	NO
Allison PS-30	YES	YES	YES	NO
Bosch (Blue Coil)	NO	YES	YES	NO
Bosch (Red Coil)	YES	YES	YES	NO
Bosch 0221 121001	NO	NO	YES	NO
Chrysler 2875004	NO	NO	NO	NO
Chrysler 3690560	NO	NO	NO	NO
Chrysler E12495531	YES	YES	YES	NO
Chrysler OEM12V Coil*	YES	YES	YES	NO
Crane PS-20, PS-40	YES	YES	NO	NO
Crane PS-91	YES	YES	NO	NO
Crane PS-92	NO	NO	NO	NO
Crane LX-91	YES	YES	NO	NO
Crane LX-92	NO	NO	YES	NO
Crane LX-93	NO	NO	NO	NO
Crane PS-20	YES	YES	NO	NO
Crane PS-40	YES	YES	NO	NO
Crane PS-60	NO	YES	YES	NO
Delco 190-12V	YES	YES	YES	NO

	MSD 5/ BLASTER	MSD 6-SERIES	7AL-2, 7AL-3 SERIES	DIGITAL-7 SERIES
Ford TFI Coil	YES	YES	YES	NO
Ford OEM 12V Coil*	YES	YES	YES	NO
GM Transistor	NO	NO	NO	NO
GM HEI Coil	NO	YES	YES	NO
GM OEM 12V Coil	YES	YES	YES	NO
Mallory 28880	NO	NO	YES	NO
Mallory 29212 HEI-Low rpm	YES	YES	YES	NO
Mallory 29213 Ford TFI Low rpm	YES	YES	YES	NO
Mallory 29214	YES	YES	YES	NO
Mallory 29215	YES	YES	YES	NO
Mallory 29216	YES	YES	YES	NO
Mallory 28675	YES	YES	NO	NO
Mallory 28720	YES	YES	NO	NO
Mallory 29150	YES	YES	YES	NO
Mallory 29217	YES	YES	YES	NO
Mallory 29440	NO	YES	YES	NO
Mallory 29620	YES	YES	NO	NO
Mallory 29625	YES	YES	NO	NO
Mallory 29901	NO	NO	YES	NO
Mallory Super Mag 28900	NO	NO	NO	NO
Moroso 72350	YES	YES	YES	NO
Moroso 72380	YES	NO	NO	NO
Moroso 72381	NO	YES	YES	NO
Nology 151991500	NO	NO	NO	NO
Nology 151991600	NO	NO	NO	NO
Nology 15199170	YES	YES	NO	NO
Nology 151991750	YES	YES	NO	NO
Nology 151991800	NO	NO	NO	NO
Pertronix Flame-Thrower 40,000 Volt Canister Coil	YES	YES	YES	NO
Pertronix Flame-Thrower 45,000 Volt Canister Coil	YES	YES	YES	NO
Pertronix Flame-Thrower 50,000 Volt E-Core Coil	NO	YES	YES	NO
Pertronix Flame-Thrower HV 60,000 Volt Coil	NO	NO	NO	NO
Any foreign or domestic 12V Coil*	YES	YES	YES	NO

* The factory coil from any vehicle that has a 12 volt negative ground electrical system and has a ballast resistor or resistance wiring in the original ignition key wire will work with the MSD.

NOTE: For MSD 8-Series Ignitions use Pro Power Coil, PN 8201, Pro Power HVC, 8251, or Pro Power HVC II, PN 8261.

HELPFUL COIL INFORMATION

- A ballast resistor is not necessary with any MSD Series Ignition but can be left in-line if originally equipped.
- The MSD Blaster Coils and any other oil-filled, canister style coils should be mounted so that the high voltage coil tower is pointed upward. Also, mount the coil so the coil wire is as short as possible to keep resistance low.
- Use of any coil that is not compatible may damage the MSD and void the warranty.

Caution: Coils that have an internal power transistor are **NOT** compatible with MSD Ignition Controls. These are generally found on late model DIS or coil-per-cylinder ignitions. Check with MSD if you have any questions before installing an MSD Ignition Control.

© 2012 Autotronic Controls Corporation
FRM30885 Revised 12/11 Printed in U.S.A.