Installation Instructions

718201

2021- 2027

5.3L Tahoe / Suburban /Yukon/Yukon XL
2- Wheel Drive- or 4-Wheel Drive
With Factory Rear Exit Dual Exhaust

Installation requires moderate mechanical skill. If this job is beyond your abilities, seek the services of a qualified technician.

Trimming of tubes is required for installation on some vehicles.

If you do not understand any part of these instructions, please call Flowmaster Technical Support at (866) 464-6553 for assistance.

Apply penetrating oil generously to clamps, fasteners, pipes, and hanger rods for ease of disassembly.

REVIEW THE INSTRUCTIONS & VERIFY THE KIT CONTENTS

Take a moment to read and understand these instructions before installing your Flowmaster

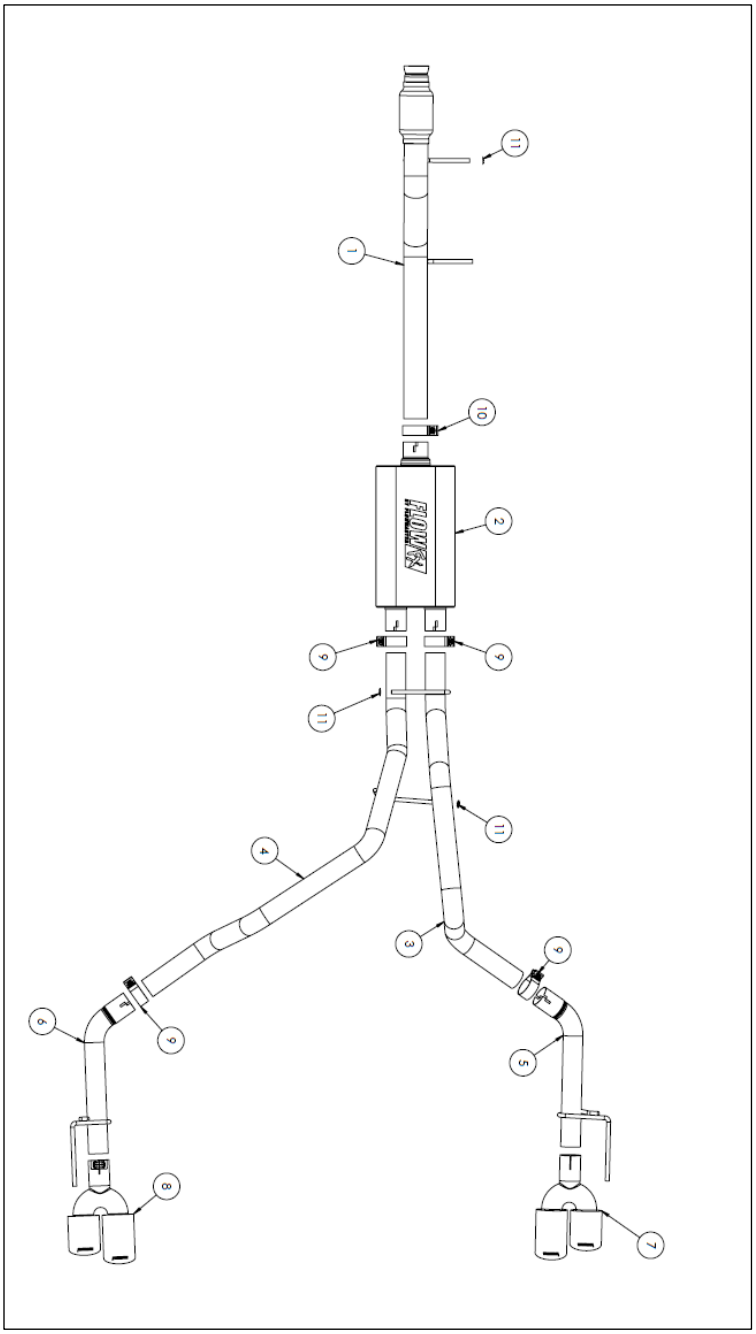

ITM#	Part #	Description	Qty.
1	27037M	Muffler Inlet Pipe	1
2	72688-Z	Muffler	1
3	86803M	Right Muffler outlet Pipe	1
4	86804M	Left Muffler Outlet pipe	1
5	86805M	Right Tail Pipe	1
6	86806M	Left Tail Pipe	1
7	ST522BC	Right Tip Assembly	1
8	ST523BC	Left Tip Assembly	1
9	MC250BS	2.5” Band Clamp	4
10	MC300BS	3.0” Band Clamp	1
11	HW503	½” Hanger Keeper	2

Use the parts drawing and list to identify components and verify your kit’s contents. In the unlikely event that any parts are missing, please contact Flowmaster Technical Support for replacements.

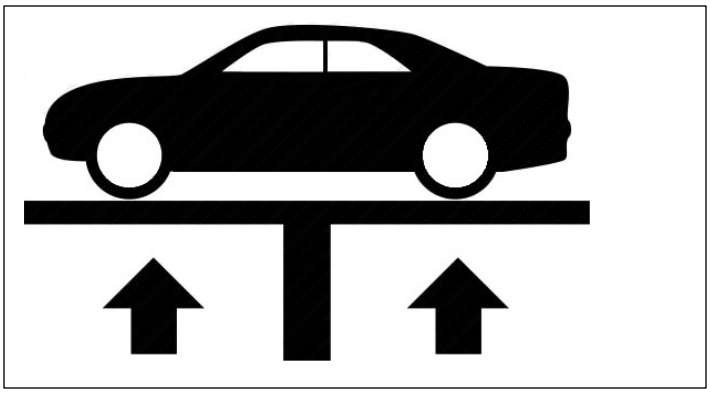

Vehicle Compatibility

Model Year: **2021-2027**
Make: **Chevy / GMC**
Model: **Tahoe /Suburban/ Yukon / Yukon XL**
Engine: **5.3L only**

- **Fits ONLY vehicles original produced with rear exit dual exhaust**
- **Will not fit vehicles with Single exit exhaust**
- **Will not fit vehicles with 6.2L engine**

BEFORE STARTING:

Raise the vehicle to a minimum of eighteen inches. A floor hoist is ideal. If no hoist is available, we strongly urge the use of axle stands as a safety measure. **Please read and understand these instructions and disclaimer in their entirety before attempting installation.**

Note:
Cutting may be required!!
Depending on the Wheelbase of your vehicle you may have to trim the Flowmaster Exhaust to fit. Read all these instructions and refer to the trim instructions for detailed information on what tubes to trim and how much to trim from each tube.

CAUTION! WORK ONLY ON A LEVEL SURFACE. USE JACKS /JACK STANDS OF SUFFICIENT CAPACITY TO LIFT AND SUPPORT YOUR VEHICLE. NEVER WORK UNDER A VEHICLE SUPPORTED BY A FLOOR OR BUMPER JACK

Removing the OEM Exhaust:

NOTE: Cutting the OEM exhaust is Not necessary but will make removing the OEM muffler assembly much less difficult. Please read and follow all instructions before attempting to install this exhaust system.

1. Remove the spare tire, metal heat shield, left and Right Plastic heat shields
2. Remove the rear hanger assemblies from the tail pipes and save for reuse. **Fig.1**
3. Remove the (2x) 13mm nuts at the tail pipe mounting flange just over the rear axle. Remove the tail pipe assembly from the vehicle. **Fig. 1**

   Note: The tail pipes are one large and awkward assembly, it may require 2 people to handle safely.

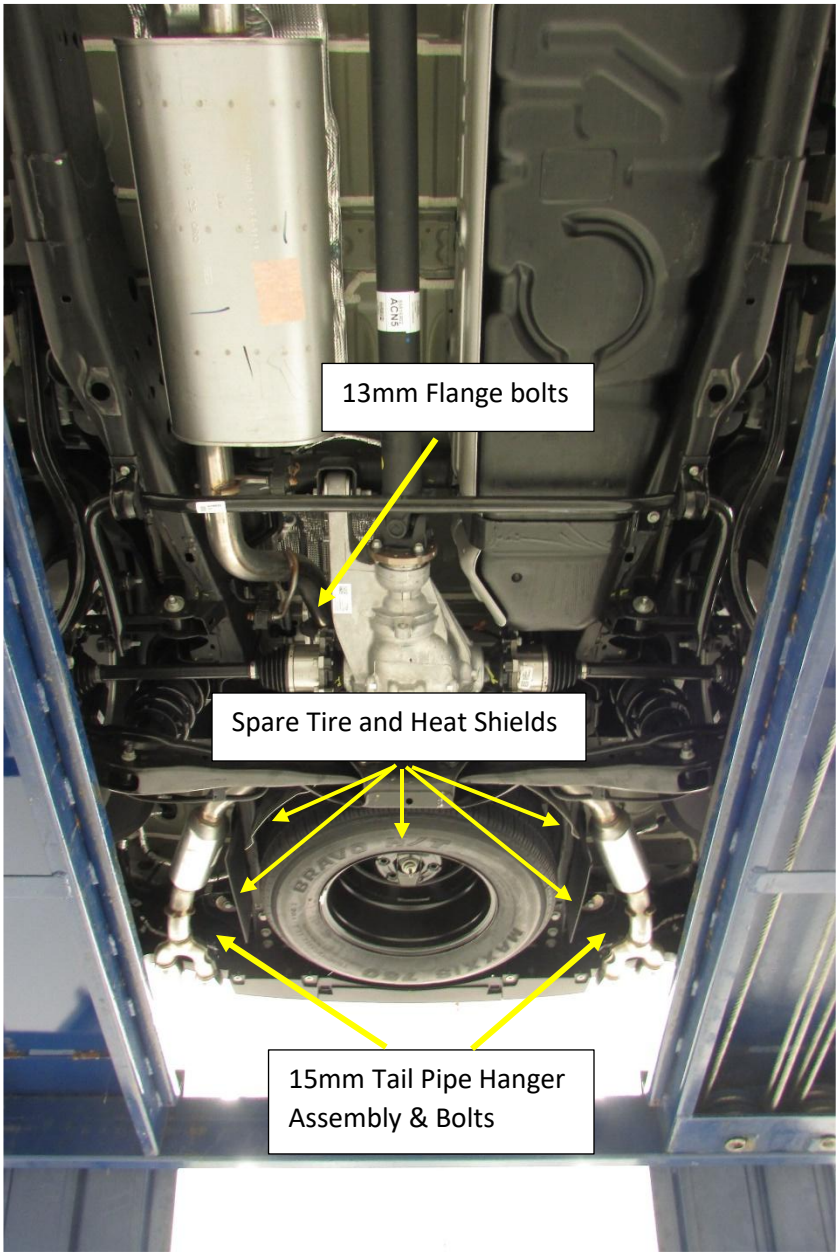

Figure.1

Removing the OEM Exhaust: Continued

4. Remove the 2x bolts at each Sway bar mount on the frame rail. This will provide added room to remove the OEM muffler from the vehicle. **Fig.2**
5. Cut the outlet pipe just after the muffler to simplify removal **(skip to Step. 7 if not cutting)**. Remove the hanger rod isolators and remove the over axle pipe. **Fig.2**
6. Support the muffler
7. Loosen the 13mm bolt on the band clamp just before the flex section of the OEM muffler inlet pipe. remove the isolator(s) on the frame rail and remove the OEM muffler assembly. **Fig.2**

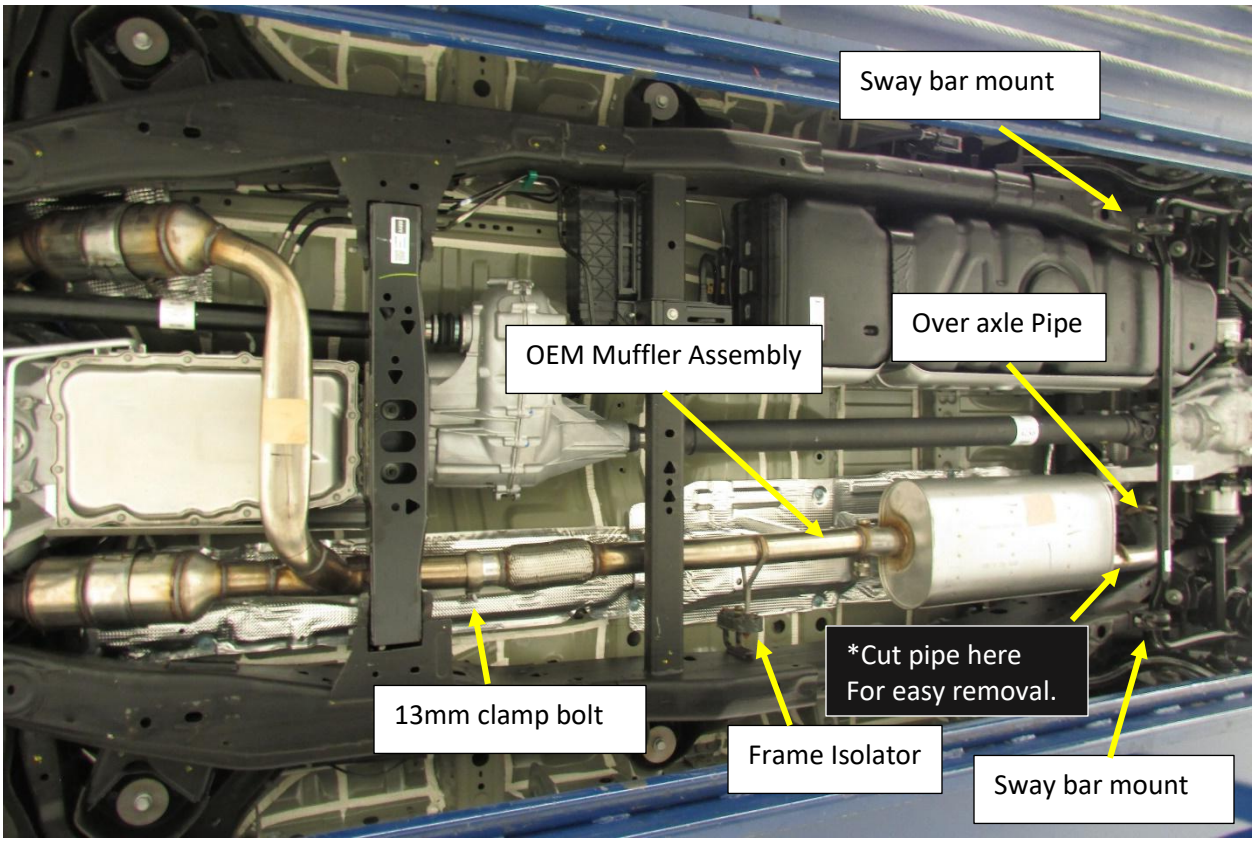

Figure.2

Installation of the 718201 Exhaust

Note: This exhaust kit is designed to fit multiple wheelbase vehicle platforms and will need the Muffler Inlet Pipe and the Left and Right tail pipes trimmed to fit short wheelbase vehicles.

<u>Vehicle Identification and Trim Requirements</u>

- Suburban/ Yukon XL 134.1" (Long Wheelbase) – **"NO TRIMING REQUIRED"**
- **Tahoe and Yukon 120.9" (Short Wheelbase)**
  - Muffler Inlet Pipe **(1)** – Trim 13.25" from end of 3" pipe. **Fig.3**
  - Right and Left Tail Pipes **(5)(6)**- Trim 1.75" from end of 2.5" pipe. **Fig.4**

27037M Muffler Inlet Pipe

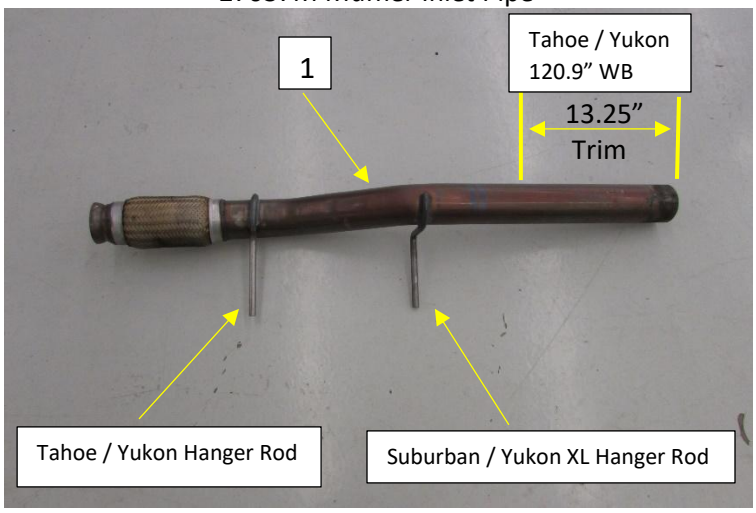

Figure.3

86804M/ 86805M Tail Pipes

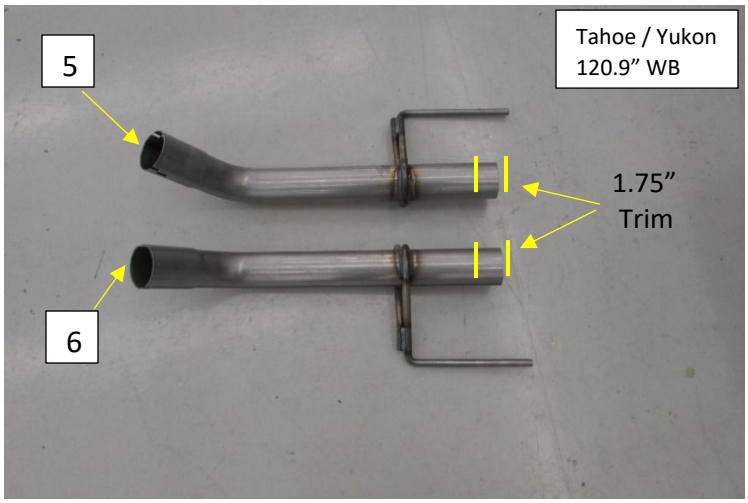

Figure.4

Note: The unused hanger rod can be left in place or trimmed off for a cleaner installation if desired

Installation of the 718201 Exhaust

1. Bend the small locking tang of the OEM band clamp to unlock it from the OEM Muffler inlet pipe. Remove the band clamp from the OEM Muffler Inlet pipe. **Fig.5**
2. Install the band clamp on to the flared inlet of the Flowmaster Muffler Inlet Pipe **(1)** with the tang at the bottom of the pipe, this will make easy access to the bolt. **Fig.6**
3. Install the Muffler Inlet Pipe **(1)** over the cross member and on to the ball connection of the OEM down Pipe from the Catalytic Converter. **Fig.6**
4. Install the hanger rod into the isolator on the frame rail
5. Tighten the band clamp while pushing the inlet pipe tight against the ball flare. Align the clamp and inlet pipe as straight as possible, keeping the Hanger rod level to the ground.
6. Install the Supplied 3" band clamp **(10)** on to the muffler inlet. **Fig.6**
7. Install the muffler **(2)** on to the Muffler inlet pipe approximately 2.5" **(1)**. **Support the muffler**. Tighten the clamp to allow for adjustment. **Fig.6**

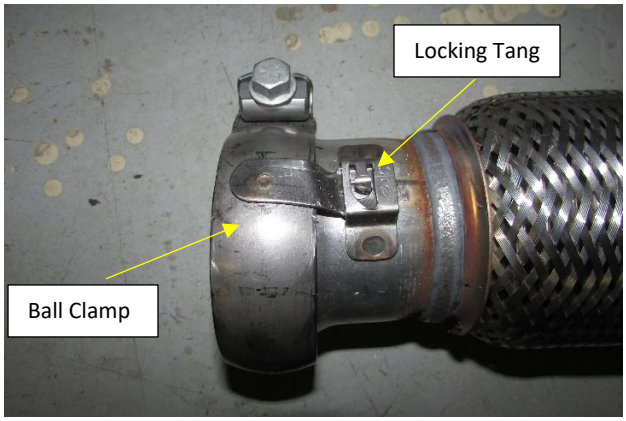

Figure. 5

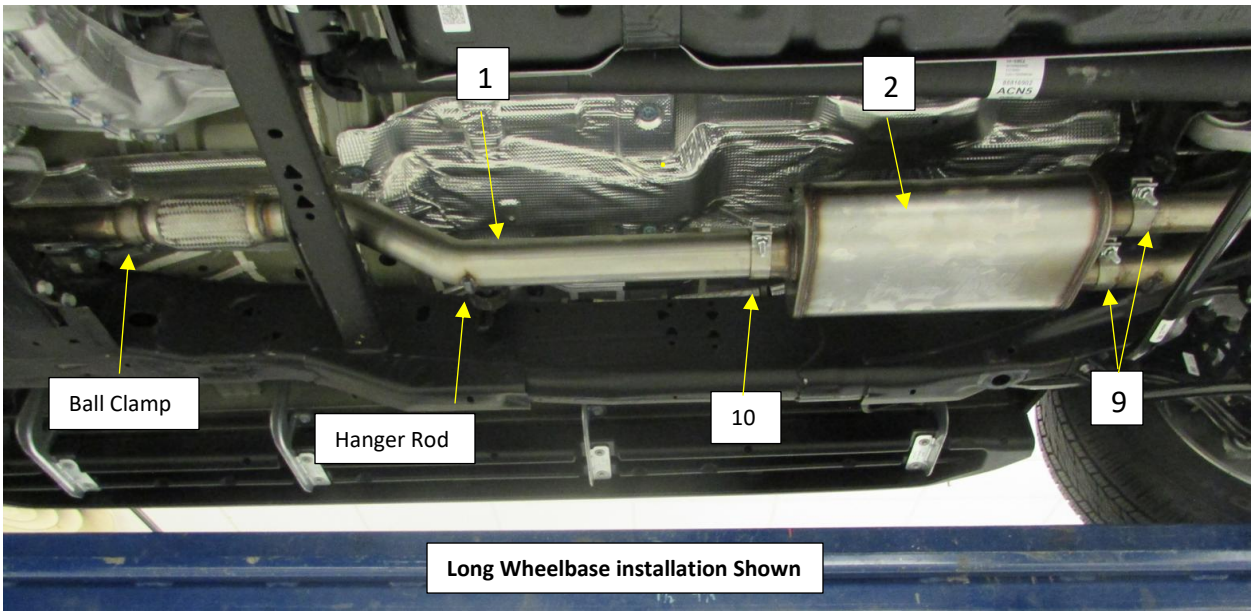

Figure. 6

Installation of the 718201 Exhaust

Spray all rubber hanger rod isolators with Lubricant prior to installation.

8. Install the supplied 2.5” band Clamps **(9)** on to the muffler outlets. **Fig.6**
9. Install the left muffler outlet pipe **(4)** from the muffler side, over the axle and across to the left side frame rail. **Fig.7**
10. Install the Right muffler outlet pipe **(3)** from the muffler side, over the axle and across to the right-side frame rail. **Fig.7**
11. Install the right pipe **(3)** into the muffler outlet, Install the hanger rod into the isolator and tighten the clamp to allow for adjustment.
12. Install the left pipe **(4)** into the muffler outlet, Install the hanger rod into the isolator and tighten the clamp to allow for adjustment.
13. Install a supplied 2.5” band clamp **(9)** on to the expanded and notched end of the left **(6)** and right **(5)** tail pipe.
14. Install the tail pipes on to the muffler outlet pipes **(3)(4)**, Tighten the clamps to allow for adjustment.
15. Install the left and right OEM tail pipe hanger bracket assemblies on to the tail pipe hanger rods. Install the 15mm bolt and tighten to allow for adjustment.
    NOTE: Be sure the alignment tabs on the bracket are in the hole in the frame rail.
16. Install the left and right Tip assemblies **(7)(8)** with a slight stick out past the bumper cover.

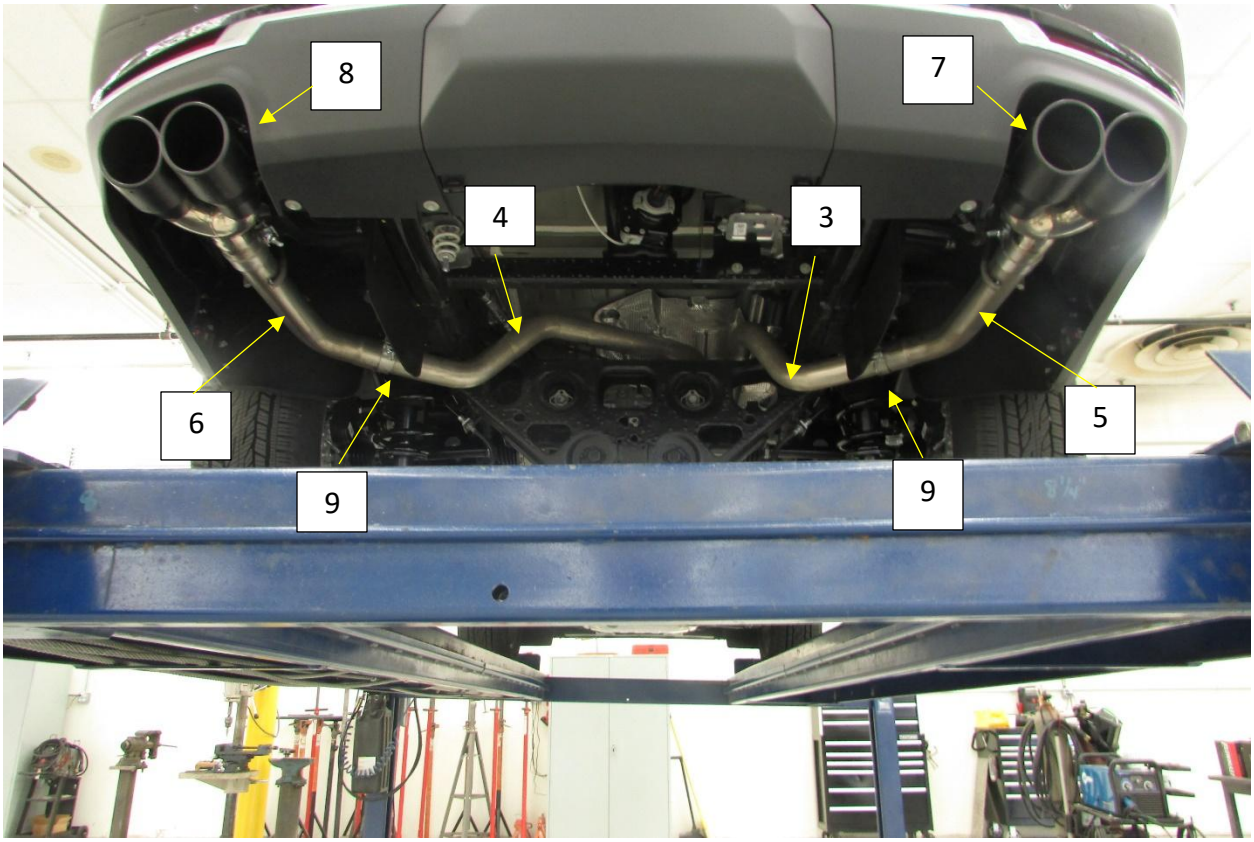

Figure. 7

Installation of the 718201 Exhaust

17. Install the spare tire heat shields.
18. Install the Sway bar frame mounts.
19. Install the Spare tire
20. Starting at the front of the system, Align the system for best alignment and component clearance. Tighten the clamps as you go.

Note: Be sure there is 1/4” minimum air space between the left and right muffler outlet pipes where they pass over the axle next to each other.

21. Install the hanger rod keepers **(11)** to hold the system in place after final adjustment.

Note: Use the rear tail pipe hanger assemblies to adjust the tips up and down and side to side. The slip joint on the tail pipe can be adjusted to fine tune the tip adjustment in the bumper pocket.

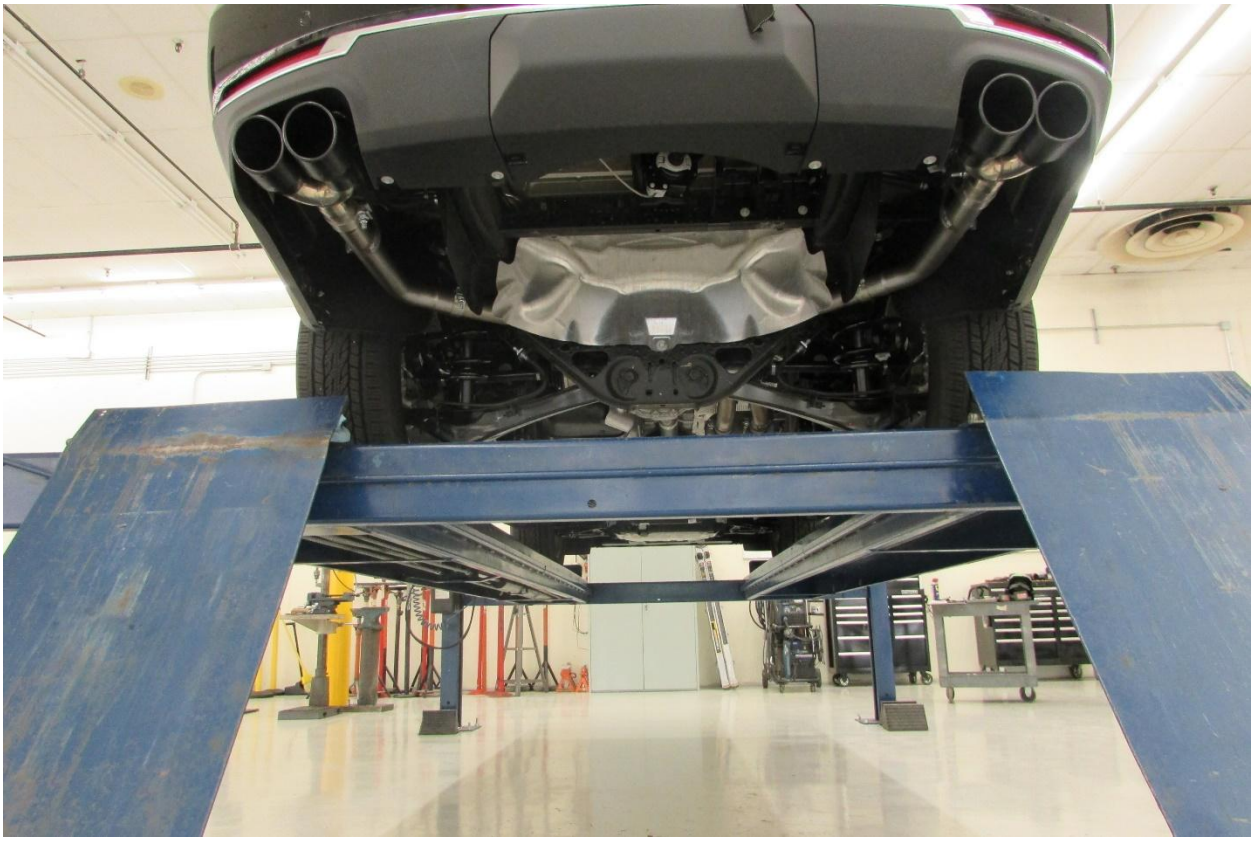

Enjoy Your Flowmaster Exhaust!