TR3551 - TKX Installation Tips

Thank you for your recent purchase of a TREMEC TKX transmission. All TREMEC transmissions are manufactured under strict ISO and QS 9000 quality standards, ensuring that you receive a quality product. Proper installation, maintenance and appropriate driving techniques will provide years of enjoyment from your new TREMEC transmission. The transmission installation should be performed by an ASE Certified Mechanic with appropriate tools, lifts and follow standard safety precautions.

Pre-Installation

While unlikely, the transmission may be stuck between gears if the transmission was placed on end during shipment. ***Before installing the transmission into the vehicle***, make sure that the transmission turns freely. Simply turn the input shaft by hand and attempt to shift the transmission into each gear. If you are unable to turn, or shift the transmission, please contact the distributor where you purchased your transmission for further instructions.

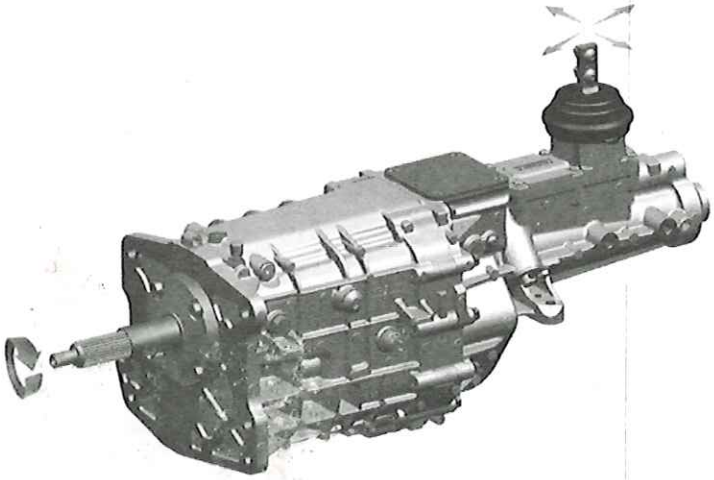

Oil

Caution: TRANSMISISON IS SHIPPED WITH NO OIL. TREMEC recommends TREMEC HP MTF oil for all TKX transmissions. The transmission should be filled through the fill plug located on the passenger side of the transmission. Vehicle must be on level surface while checking fluid. Proper fill level is achieved when oil reaches the plug hole (approximately 5.07 pints).

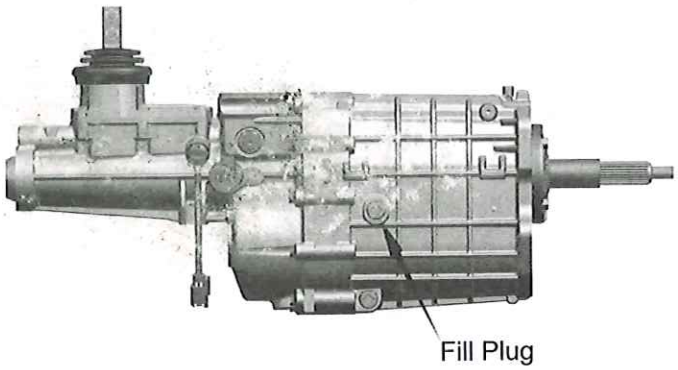

Clutch Housing
The clutch housing must be properly installed and aligned using a dial indicator. The centerline of the transmission must match the crankshaft, or severe damage to the transmission will occur. The clutch housing must also be perpendicular to the rear of the engine block. A maximum run-out of .005" is allowable. Specific dial indicating instructions should be included with your clutch housing.

Clutch Selection
All applications have their own unique requirements. TREMEC suggests you should work with a reputable clutch manufacturer who can provide you with the correct combination based on your vehicle and how you will use it. Please keep in mind, no clutch system is capable of best performance in all situations. Incorrect clutch selection may lead to transmission/driveline damage, noise, and other concerns.

Clutch Adjustment
Proper clutch adjustment is necessary. The clutch disc must have an "air gap" to break torque to make a clash-free shift and prevent damage to the transmission. Please follow clutch manufacturer's instructions.

Driveshaft
It is extremely important to maintain the original driveline angle. Excessive driveline angles will cause vibrations and may damage the transmission. All TKX transmissions use a standard 31-spline slip-yoke part # 2-3-6041X, which is available from authorized TREMEC distributors. When installing the slip-yoke, be careful not to damage the rear-seal, as this will result in oil leakage. There is a rubber donut on the output-shaft that is used to prevent the transmission from leaking during shipment. Donut removal is not necessary and is not recommended since seal damage can occur during removal. The slip-yoke must be able to stroke freely on the transmission output shaft without bottoming out while maintaining maximum spline contact. Proper driveshaft length is critical to ensure proper movement and to avoid vibrations that can cause transmission and driveline damage.

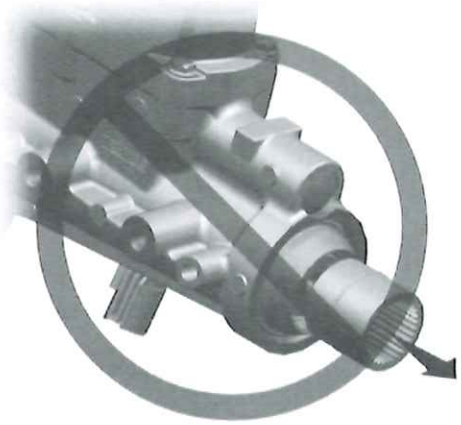

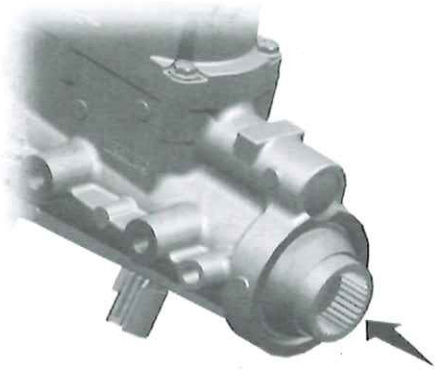

Cross-Member
It is important to have the cross-member located properly to the rear mount location on the transmission. Modifications that result in an "overhang" or cantilevered mount will result in a vibration and potential to cause severe damage to the transmission. Proper mount height and cross-member location are very important to maintain correct driveline angle.

Mount
Transmissions should never be solid-mounted. Instead, rubber OEM-style mount should be used. Softer mount is less likely to allow binding and distortion that can cause severe transmission damage. Also, noise/vibration transfer into the vehicle is minimized with a softer mount.

Shifters

The transmission will accommodate numerous applications by using any one of the several available shifter locations. The stock shifter may be unbolted by removing the six bolts and rotating the shifter 180 degrees, which will move the shifter forward approximately 2 ¾". The bolt pattern on the stub lever of TREMEC shifters will fit most Hurst® shift levers. Using an aftermarket lower shifter assembly may void your warranty. If an aftermarket shifter is used, remove the shift stops. All TREMEC transmissions have internal stops and can not be over shifted. TREMEC recommends using a rubber isolator for mounting the upper shift lever to reduce driveline noise.

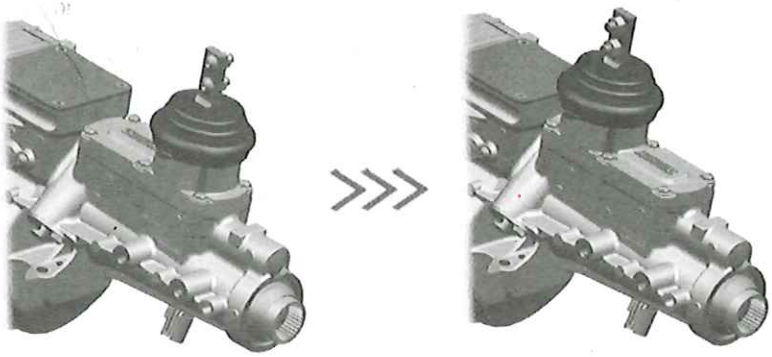

Electrical Connectors

There are three connectors on the TKX transmission: 1) Neutral start switch, 2) Back-up light sensor, 3) Speedometer pick-up. The neutral safety switch can be used to prevent the car from being started while in gear. The pigtail located on the rear of the transmission is an open circuit until the transmission is placed in neutral. The back-up light sensor is on the driver side of the transmission case and is an open circuit until the transmission is shifted into reverse. The electronic speedometer pick-up is located on the rear-extension passenger side.

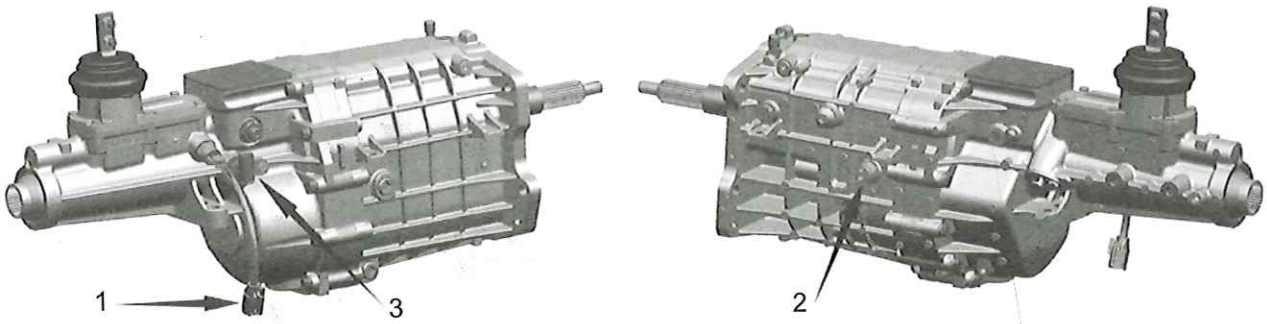

Mechanical Speedometer .

All TKX's have the Ford style speedometer pick-up bore located on the driver-side rear extension. You must use a Ford T-5 speedometer cable end. (Note: If you are using the electronic pick-up, you must plug the mechanical speedometer hole with a metal plug to avoid oil leaks. Kit part # 30-360-1X is available from authorized TREMEC distributors.

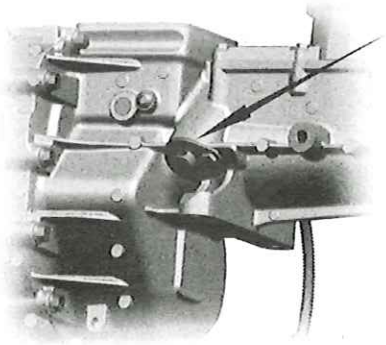

Mechanical Speedometer plugged

Maintenance

Recommended oil change intervals should be based on specific usage. In most street-only applications a "fill for life" is adequate, while in severe/racing applications a more frequent fluid change should be prescribed. Excessive heat will cause most fluids to breakdown and ultimately cause damage to the transmission. Tremec recommends that fluid temperatures are kept below 260°F to avoid fluid breakdown and transmission damage.

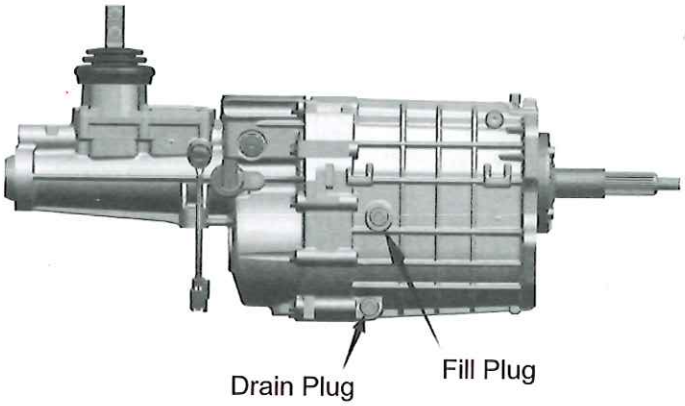

Driving Techniques

A 500-mile break-in period will prevent premature wear and possible damage to the transmission. During the break-in period, you must avoid high RPM shifts and "drag" starts. The clutch must be fully disengaged to shift the transmission. Do not use excessive force when shifting the transmission. If you experience clash shifts (grinding), check clutch travel to ensure proper air-gap is achieved. Another possible cause of clash shifting is improper transmission installation (excessive driveline angle / resulting in poor driveline alignment). Do not attempt to shift the transmission when the engine is revving over 6,500 RPM's. Do not hold the transmission in gear by applying force on the shifter. This will damage the pads on the shift forks and may result in significant damage to the transmission.

Warranty

This product is warranted 12 months from date of purchase. (Must provide proof of purchase). No labor. TREMEC warrants that the transmission will be free of defects in material and workmanship under normal use and service when properly installed in appropriate applications. Warranty is voided if transmission is modified or used for racing. **Questions regarding installation and warranty should be directed to the TREMEC distributor where you purchased your transmission**